jaga
CLIMATE DESIGNERS

BRIZA BUILT-IN CEILING

POWERFUL COOLING & HEATING.
SEAMLESSLY COMBINED.

BRIZA

BUILT-IN CEILING

Technical drawings **18**

Briza 12 **22**

2-pipe....22

4-pipe....24

Briza 22 **26**

2-pipe....26

4-pipe....28

Briza 26 **30**

2-pipe....30

4-pipe....32

Accessories **34**

HYDRONIC CONNECTION

Valve sets....38

Pressure drop....40

Condensate pump....44

ELECTRICAL CONNECTION

Power supplies....49

Which Jaga JDPC control do you need?....50

Jaga JDPC Controls....52

Thermostats....53

Sample wire diagrams electrical installation....54

Briza 10....55

Briza 12....59

Briza 22 / 26....62

BRIZA - POWERFUL COOLING & HEATING

A comfortable indoor climate today is about more than heating alone. Modern buildings demand efficient cooling to prevent overheating, energy-efficient heating, quiet operation and seamless integration into any interior.

Briza is the powerful range of fan convectors that combines all these qualities in one water-based indoor climate solution.

LOW-TEMPERATURE TECHNOLOGY

ENERGY-EFFICIENT HEATING AND COOLING IN ONE SYSTEM.

Jaga heat exchangers deliver high performance at low water temperatures, with their hydrophilic coating further optimising that performance.

Briza pairs that static heat exchanger with integrated, quiet fans that actively support it.

These energy-efficient EC motors enhance airflow across the heat exchanger, effortlessly heating or cooling a large air volume at low noise levels.

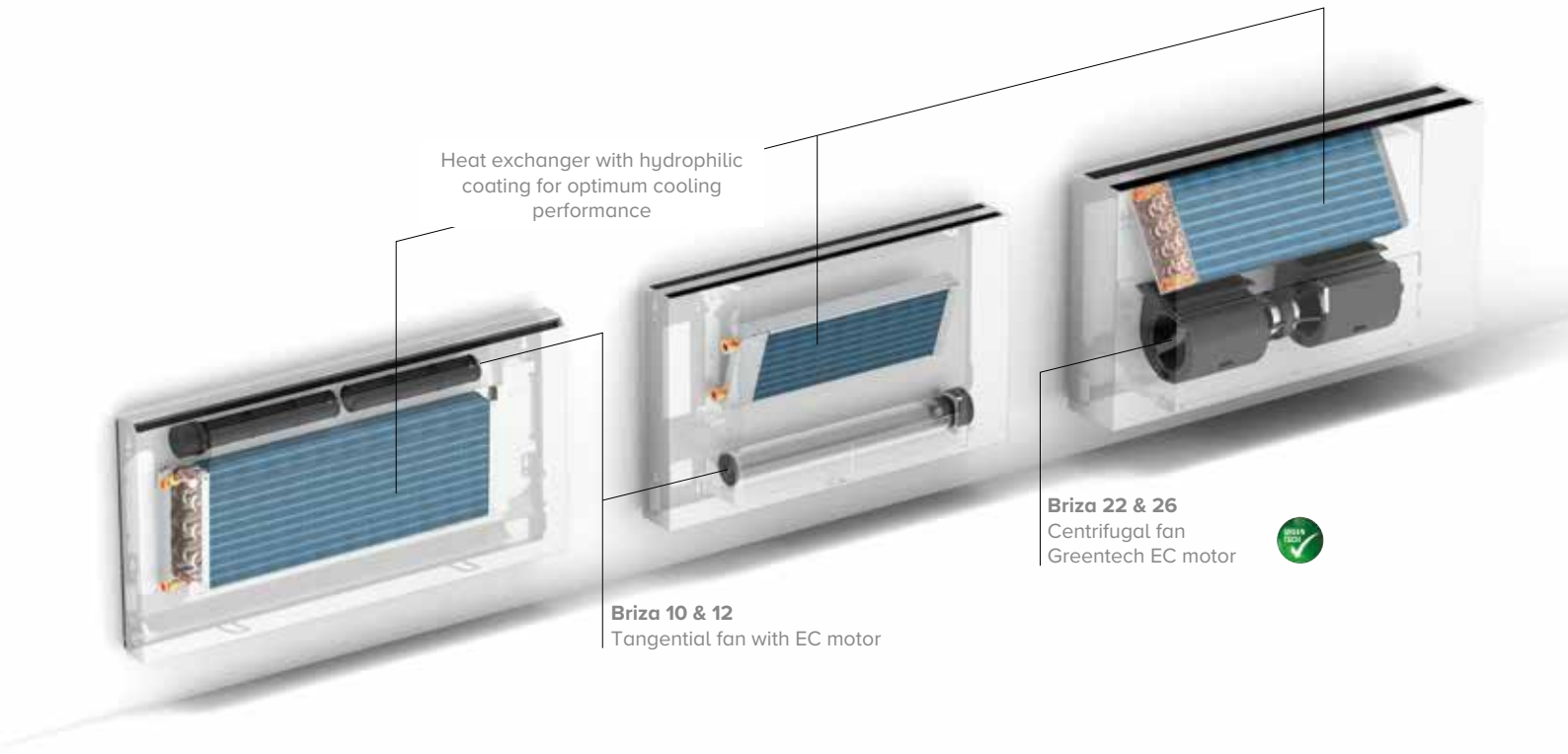

A PERFECT PARTNER FOR MODERN ENERGY SYSTEMS

Briza delivers high outputs at low water temperatures and works particularly efficiently with heat pumps and other low-temperature systems.

This allows the Briza range to unlock the full potential of your heat pump, all year round: rapid heating in winter and powerful cooling in summer.

No heat pump yet? No problem, because Briza is also a smart long-term choice. The system is ideal for phased renovation: start with fan convectors alongside your existing installation, then switch to a heat pump later.

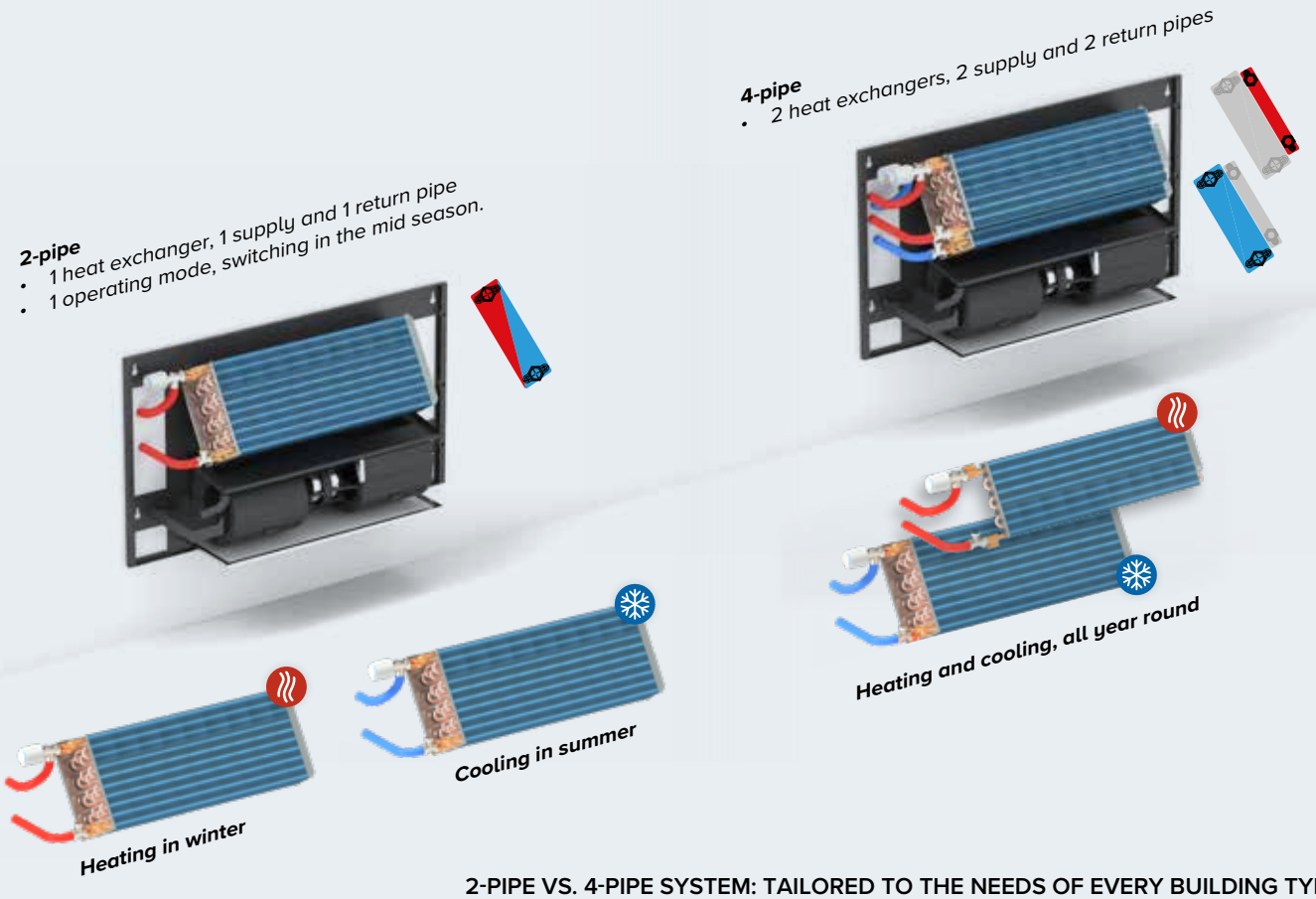

2-PIPE VS. 4-PIPE SYSTEM: TAILORED TO THE NEEDS OF EVERY BUILDING TYPE

The choice of piping system largely determines how flexibly a building can respond to its comfort needs. A two-pipe system (with one supply and one return pipe) can heat in winter and cool in summer. Ideal for buildings with consistent usage patterns.

A four-pipe system takes it a step further, with separate circuits for hot and cold water, allowing both technologies to be available simultaneously and enabling individual control of each space or zone. This significantly increases flexibility, especially in buildings where needs vary greatly or change quickly.

HEATING & COOLING VIA AIR DUCTS

Briza 22 and Briza 26 are also available in HP versions. These units with high-efficiency motors deliver high output, which is efficiently distributed throughout the building via air ducts.

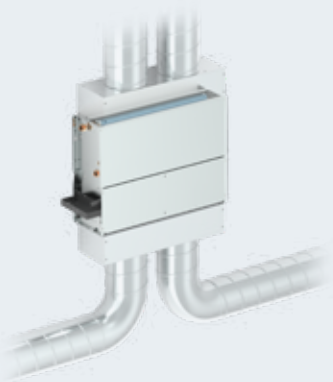

BRIZA - DESIGNS MATCHING ANY INTERIOR STYLE

Briza seamlessly combines technology with design. Within the range, you not only choose the right capacity, but also the look that matches your interior. With four design lines and various installation options, the range offers maximum architectural freedom.

Coreline forms the trusted foundation of the range: sleek, timeless and versatile.

Baseline brings minimalist elegance with strong lines.

Woodline introduces a warm, natural look with a refined wood finish.

Waveline opts for a flowing design that gives technology an architectural quality.

AWARD-WINNING DESIGN

Briza meets the needs of an ever-evolving HVAC market, with a strong focus on performance, flexibility and design. This intelligent combination has been recognised with numerous national and international awards.

NET ZERO DESIGN EDITION

reddot winner 2025
best of the best

RED DOT AWARD 2025
WINNER
Product Design

DESIGN AWARD 2025 DESIGN AWARD 2026

IF DESIGN AWARD
2025 & 2026 WINNER
Building Technology

GERMAN DESIGN AWARD WINNER 2025 GERMAN DESIGN AWARD WINNER 2026

GERMAN DESIGN AWARD
2025 & 2026 WINNER
Excellent Product Design Energy

EUROPEAN PRODUCT DESIGN AWARD 2025 TOP DESIGN EUROPEAN PRODUCT DESIGN AWARD 2025 WINNER

EUROPEAN PRODUCT DESIGN AWARD
2025 TOP DESIGN + 2025 WINNER

IDA DESIGN AWARDS GOLD WINNER 2024

IDA AWARD
GOLD WINNER
Eco / Green Design

ICONIC AWARDS 2025 WINNER PRODUCT

ICONIC AWARDS
WINNER "PRODUCT" 2025

DNA PARIS DESIGN AWARDS 2025 WINNER

DNA PARIS DESIGN AWARD
BADGE WINNER 2025

LICC

LICC AWARD
WINNER
Use Product

Henry van de Velde 25 Awards

HENRY VAN DE VELDE AWARD
BRONZE WINNER
Environment

BRIZA

USABILITY IN EVERY ROOM, ALL YEAR ROUND

The Briza family is a flexible product range of fan convectors for small and large rooms, wall or ceiling solutions, with casing or invisibly integrated. What makes the versatility of this product range stand out is the possibility of both heating and cooling.

OVERVIEW BUILT-IN

	Briza 10	Briza 12
Thickness *(cm)*	/	11.7
INSTALLATION IN A WALL RECESS		
AVAILABLE LENGTHS *(cm)*	/	52 - 72 - 102 - 122
AVAILABLE HEIGHTS *(cm)*	/	38 - 52
BUILT-IN CEILING		
AVAILABLE LENGTHS *(cm)*	/	52 - 72 - 102 - 122
AVAILABLE HEIGHTS *(cm)*	/	38 - 52
COATING HEAT EXCHANGER	/	HYDROPHILIC
Water content *(l)*	/	0,3 - 0,5 - 0,9 - 1,1
Sound pressure level *(dB(A))*	/	<20 - 47
KV value of the heat exchanger	/	2,2 - 2 - 1,7 - 1,6
FAN	/	TANGENTIAL
ELECTRICAL CONNECTION	/	24 VDC
POWER RANGE 2-PIPE (maximum control voltage)		
Cooling total (7/12/27) *(Watts - maximum control voltage)*	/	553 - 2702
Non-condensing cooling (16/18/27) *(Watts - maximum control voltage)*	/	235 - 1149
Heating (45/40/20) *(Watts - maximum control voltage)*	/	826 - 4026
POWER RANGE 4-PIPE (maximum control voltage)		
Cooling total (7/12/27) *(Watts - maximum control voltage)*	/	442 - 2026
Non-condensing cooling (16/18/27) *(Watts - maximum control voltage)*	/	118 - 862
Heating (45/40/20) *(Watts - maximum control voltage)*	/	660 - 1695
AIRFLOW		

Briza 22	Briza 26
23.15 / 27.15	26.0
55 - 75 - 95 - 125 - 155 - 190 55	125 - 155 - 190 56
55 - 75 - 95 - 125 - 155 - 190 55	125 - 155 - 190 56
HYDROPHILIC 1,2 - 1,8 - 2,2 - 3,1 - 4,1 - 4,1 <20 - 55 3 - 2,8 - 2,7 - 2,1 - 2,1 - 2 CENTRIFUGAL 230 VAC	HYDROPHILIC 4,7 - 6,1 - 7,5 19,5 - 46,5 ± 3,5 CENTRIFUGAL 230 VAC
2991 - 12790	9301 - 14335
1185 - 4540	3253 - 5003
3055 - 12634	8811 - 13161
2991 - 12790	9301 - 14335
1185 - 4540	3253 - 5003
1098 - 5814	3186 - 5814

BRIZA

OVERVIEW WITH CASING

	Briza 10	Briza 12
Thickness *(cm)*	11.0	14.0
WALL		
	Coreline, **Baseline**, **Woodline**, **Waveline**	**Coreline**, **Baseline**, **Woodline**, Waveline
	✓ ✓ ✓	✓ ✓ ✓
AVAILABLE LENGTHS *(cm)*	75 - 110 - 155 - 190	75 - 95 - 125 - 145
AVAILABLE HEIGHTS *(cm)*	56	41/42 - 55/56
CEILING		
	Coreline, **Baseline**, Woodline, Waveline	**Coreline**, **Baseline**, Woodline, Waveline
	✓	✓ ✓
AVAILABLE LENGTHS *(cm)*	90 - 125 - 170 - 205	75 - 95 - 125 - 145
AVAILABLE HEIGHTS *(cm)*	58	42 - 56
COATING HEAT EXCHANGER	HYDROPHILIC	HYDROPHILIC
Water content *(l)*	0,4 - 0,7 - 1,1 - 1,5	0,3 - 0,5 - 0,9 - 1,1
Sound pressure level *(dB(A))*	<20 - 49	<20 - 47
KV value of the heat exchanger	1,5 - 1,2 - 1,1 - 1	2,2 - 2 - 1,7 - 1,6
FAN	TANGENTIAL	TANGENTIAL
ELECTRICAL CONNECTION	24 VDC	24 VDC
POWER RANGE 2-PIPE (maximum control voltage)		
Cooling total (7/12/27) *(Watts - maximum control voltage)*	884 - 3659	503 - 2575
Non-condensing cooling (16/18/27) *(Watts - maximum control voltage)*	376 - 1556	214 - 1095
Heating (45/40/20) *(Watts - maximum control voltage)*	868 - 3593	751 - 3834
POWER RANGE 4-PIPE (maximum control voltage)		
Cooling total (7/12/27) *(Watts - maximum control voltage)*	/	442 - 2026
Non-condensing cooling (16/18/27) *(Watts - maximum control voltage)*	/	188 - 862
Heating (45/40/20) *(Watts - maximum control voltage)*	/	660 - 1695
AIRFLOW		

Briza 22	Briza 26
23.15 / 27.15	
Coreline ✓	Coreline
Baseline ✓	Baseline
Woodline	Woodline
Waveline	Waveline
90 - 110 - 130 - 160 - 190 - 225	/
63	/
Coreline ✓	Coreline
Baseline	Baseline
Woodline	Woodline
Waveline	Waveline
90 - 110 - 130 - 160 - 190 - 225	/
63	/
HYDROPHILIC	/
1,2 - 1,8 - 2,2 - 3,1 - 4,1 - 4,1	/
20 - 55	/
3 - 2,8 - 2,7 - 2,1 - 2,1 - 2	/
CENTRIFUGAL	/
230 VAC	/
2645 - 11446	/
1044 - 4031	/
2679 - 11184	/
2645 - 11446	/
1044 - 4031	/
1021 - 5387	/

jaga

CLIMATE
DESIGNERS

BUILT-IN CEILING

BRIZA BUILT-IN CEILING

We aim to bring our fan convectors to market as installation-ready as possible. Where previously only a water supply connection was needed, today there is also a power supply, electronic control and thermostat connection required. For your installation convenience, we have developed a Plug & Play range. The same high-quality performance, but with all connections pre-assembled. Order with confidence for effortless installation!

DIFFERENT TEMPERATURE SETTINGS

PLUG & PLAY — Complete unit with temperature regulation, valve set and power supply

JAGA JDPC SMART BMS JRT

Room temperature control via a Jaga WiFi thermostat mounted in the room (surface-mounted or recessed thermostat)

Ordering example Briza
Height 38 cm, Length 52 cm

BZBC 038 052 L D21 TW
D21 TB
D21 2W

JAGA JDPC SMART BMS JRT C

Room temperature control via a Jaga WiFi thermostat mounted in the room (surface-mounted or recessed thermostat)

Ordering example Briza
Height 38 cm, Length 52 cm

BZBC 038 052 L D25 TW
D25 TB
D25 2W

HYDRONIC CONNECTION (left)
pre-assembled valves, connection Eurocone 3/4”

ELECTRICAL CONNECTION
Clamp connector for electrical connection 24 VDC on the right, via 230 VAC power supply to be connected

TEMPERATURE REGULATION
temperature control via control panel, integrated (WiFi) thermostat, or external (WiFi) thermostat

CONDENSATE PUMP

BRIZA BUILT-IN CEILING

CONFIGURABLE UNIT	Configure your unit to suit your installation and requirements, the system is delivered unassembled.		
	BRIZA 12	**BRIZA 22**	**BRIZA 26**
1. Select your unit based on dimensions and heat output	ex. **BZBC 038 052 12 2 L DDD**	ex. **BABC 055 055 22 BT 2 LR G2 DDD**	ex. **BBBC 056 125 26 BT 4 LR G2 DDD**
2. Choose the desired control system	No Jaga JDPC control system, Jaga JDPC BMS: D03 (2 P) / D04 (4P) Jaga JDPC On / Off: D07 (2P) / D08 (4P)	No Jaga JDPC control system, Jaga JDPC BMS: D03 (2 P) / D04 (4P) Jaga JDPC On / Off: D07 (2P) / D08 (4P)	No Jaga JDPC control system, Jaga JDPC BMS: D03 (2 P) / D04 (4P) Jaga JDPC On / Off: D07 (2P) / D08 (4P)
3. Choose the desired power supply	power supply or DIN rail power supply based on electrical power consumption	(24 V power supply included with the selected Jaga JDPC control)	(24 V power supply included with the selected Jaga JDPC control)
4. Choose the desired valve set(s)	set 295 (with thermo-electric motor) or set 290 (with 2 lockshields)	set 301 and 98 (with thermo-electric motor or set 302 and 99 (with 2 lockshields)	set 301 and 98 (with thermo-electric motor or set 302 and 99 (with 2 lockshields)

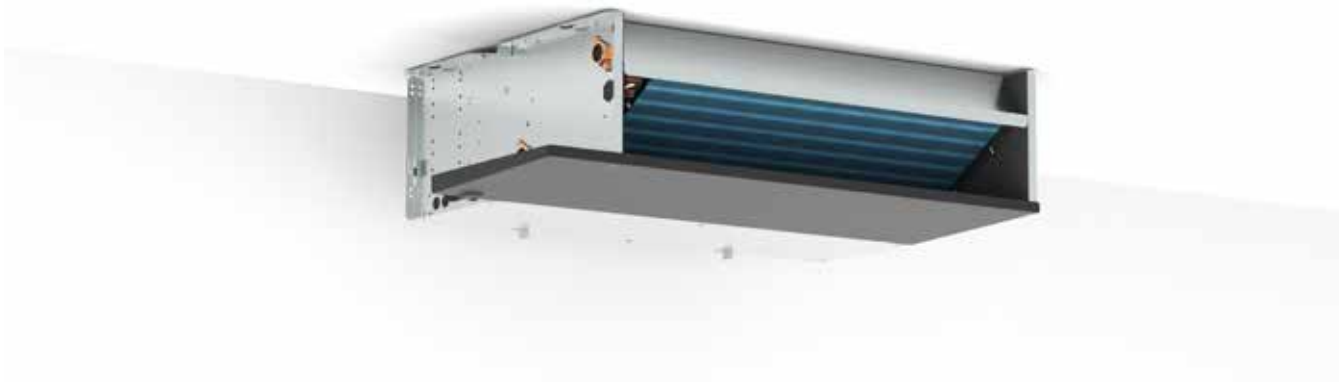

BRIZA 12 BUILT-IN CEILING

DIMENSIONS *(in mm)*

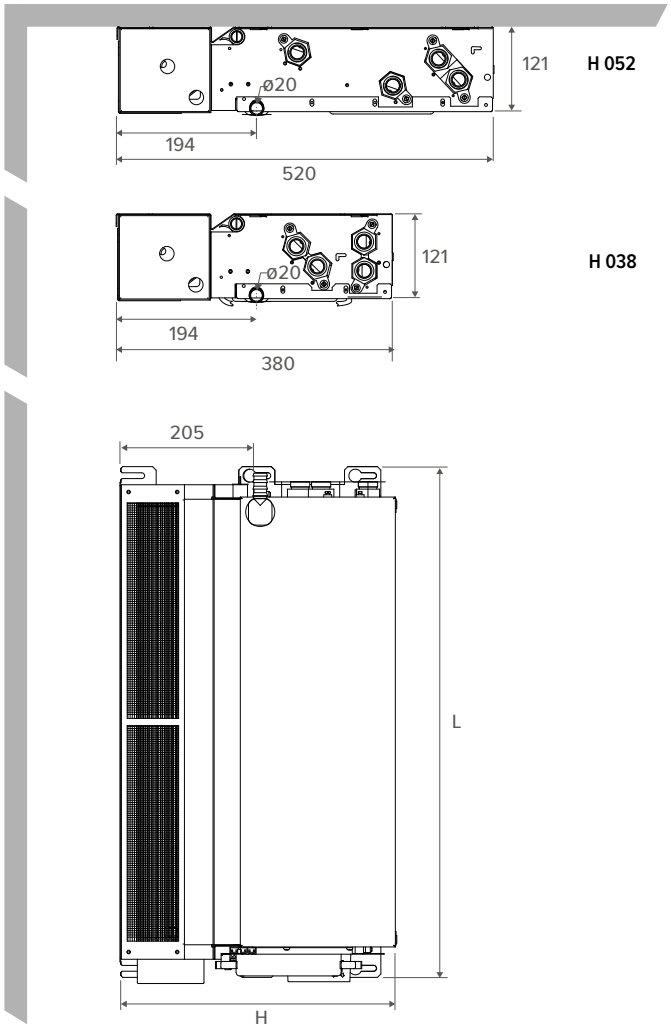

HYDRONIC CONNECTION

Height 038 *2-pipe*

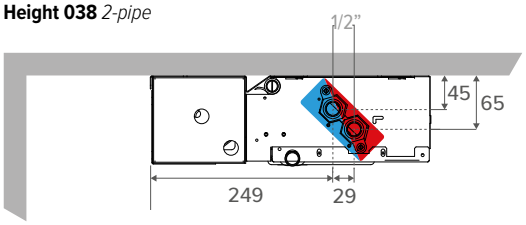

Height 038 *4-pipe*

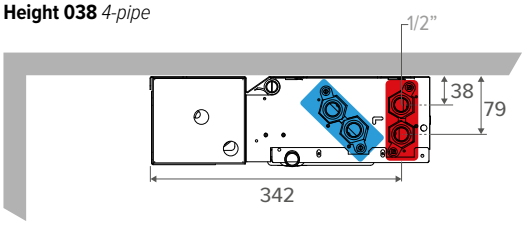

Height 052 *2-pipe*

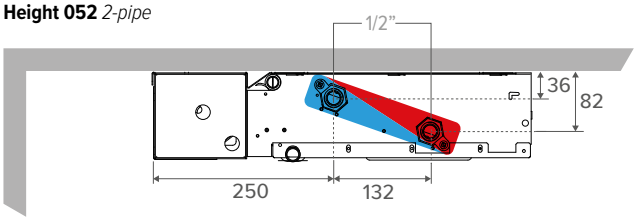

Height 052 *4-pipe*

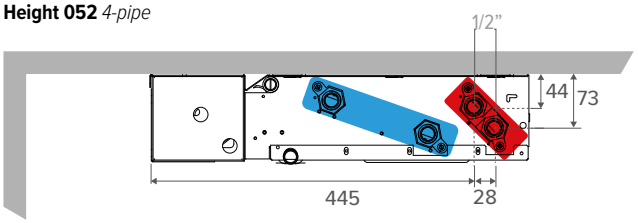

FREE SPACE

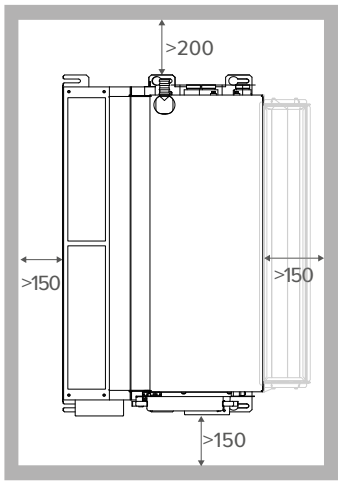

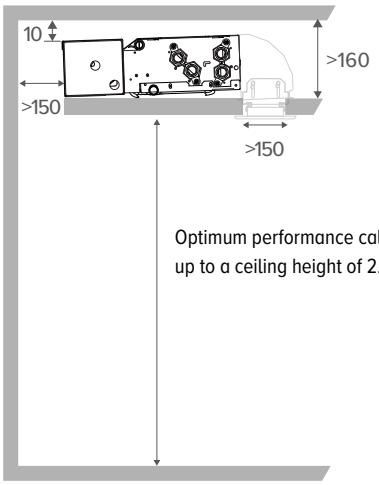

Optimum performance calculated
up to a ceiling height of 2.3 m

BRIZA 22 BUILT-IN CEILING

DIMENSIONS *(in mm)*

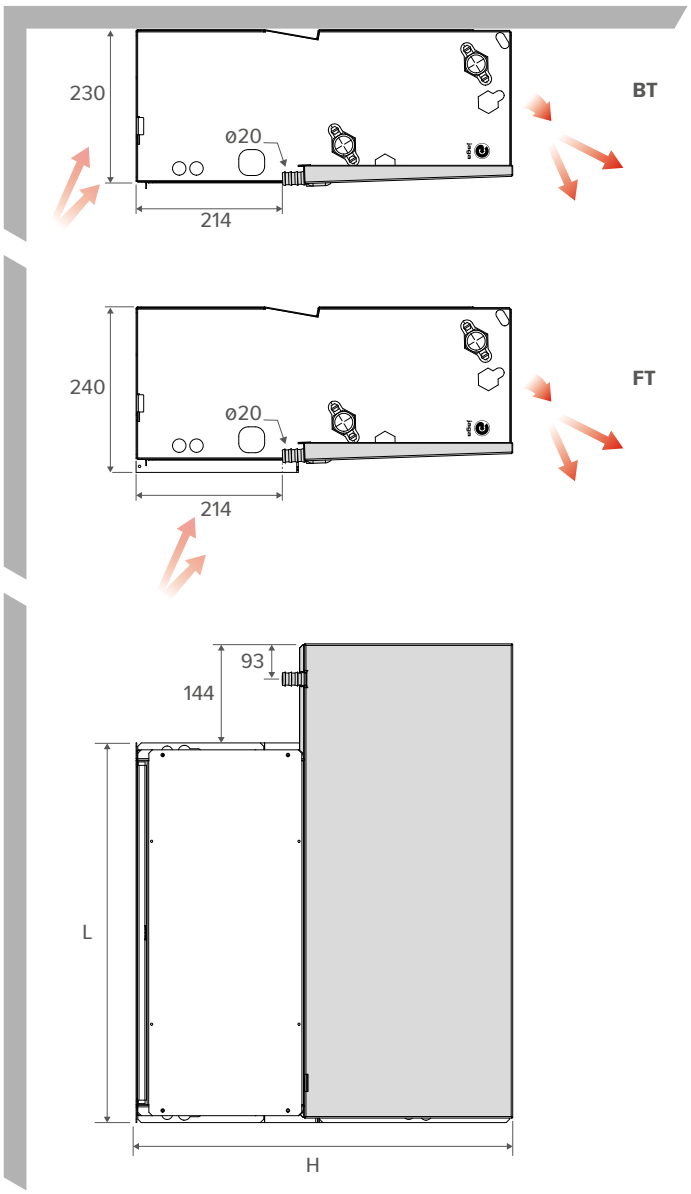

HYDRONIC CONNECTION

2-pipe

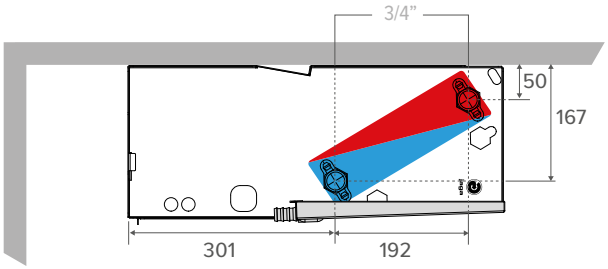

4-pipe

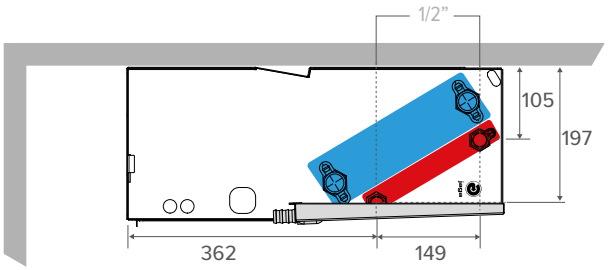

FREE SPACE

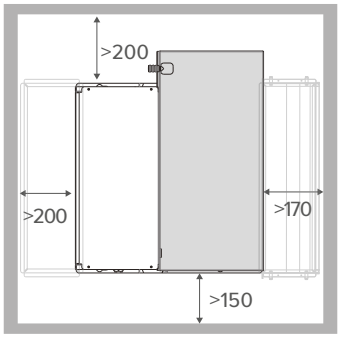

BT

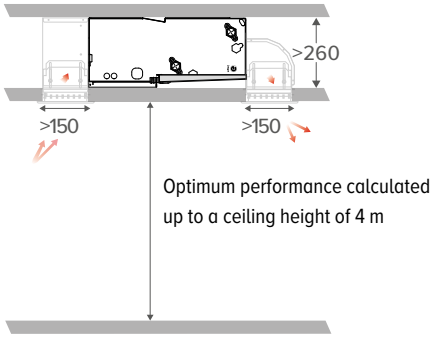

FT

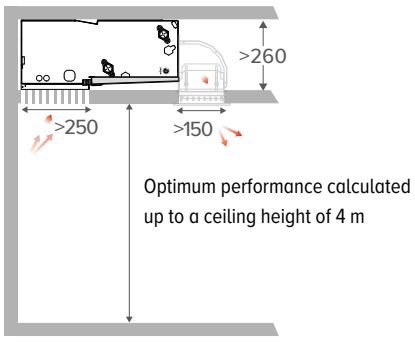

BRIZA 26 BUILT-IN CEILING

DIMENSIONS *(in mm)*

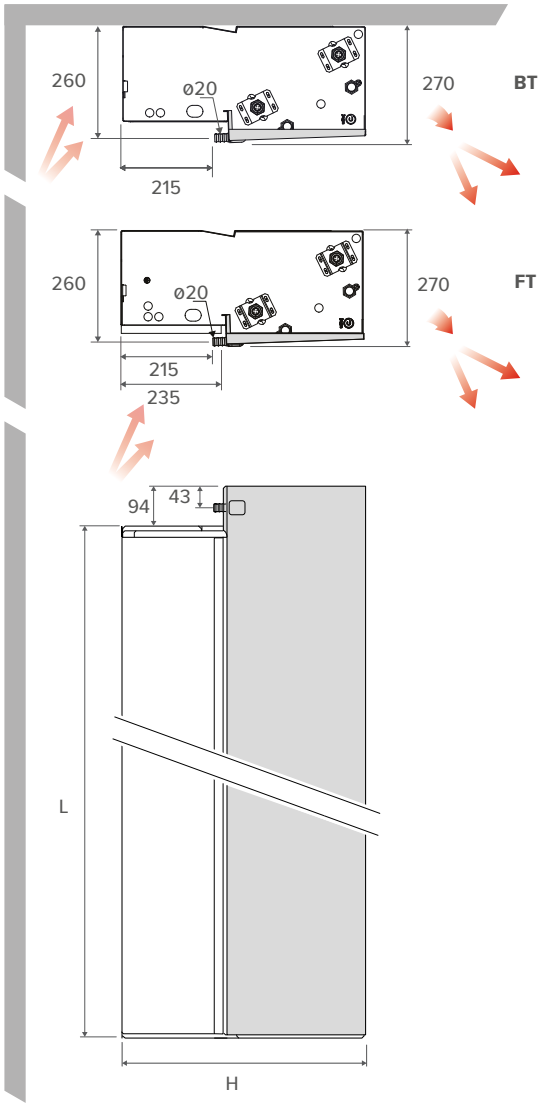

HYDRONIC CONNECTION

2-pipe

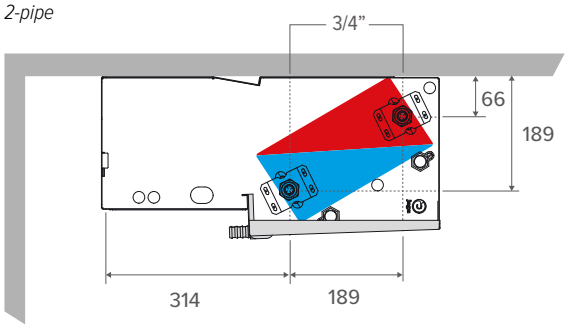

4-pipe

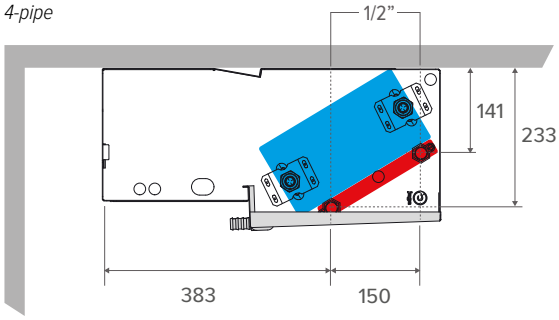

FREE SPACE

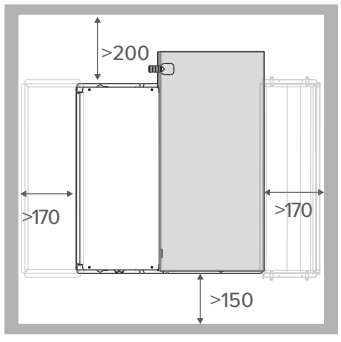

BT

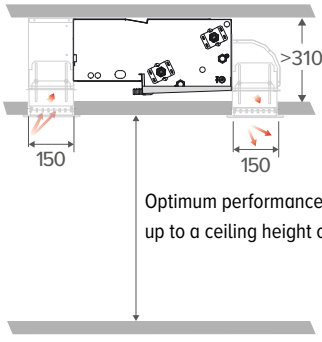

Optimum performance calculated up to a ceiling height of 4 m

FT

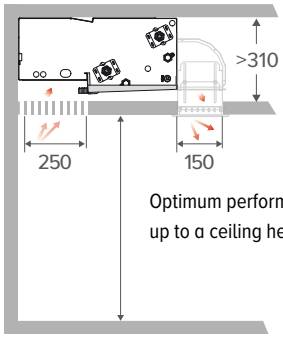

Optimum performance calculated up to a ceiling height of 4 m

BRIZA BUILT-IN CEILING

Required for Deep Cooling
Condensing cooling with a ceiling-mounted model?
Add a condensate pump to your order!

CONDENSATE PUMP

CODE	BRIZA 12	BRIZA 22	BRIZA 26
8773 0101	✓	✓	✓

CONDENSATE TRAY WITH OUTLET SPIGGOT Ø 2 CM

CODE	for Briza 12 H	BRIZA 12	BRIZA 22	BRIZA 26
5127 000 100 01	038	✓	-	-
5127 000 100 02	052	✓	-	-

CONDENSATE LEVEL SENSOR

sensor for monitoring the condensate level in the condensate collector

CODE	BRIZA 12	BRIZA 22	BRIZA 26
5127 000 100 03	✓	✓	✓

MOUNTING BRACKET FOR LEVEL SENSOR

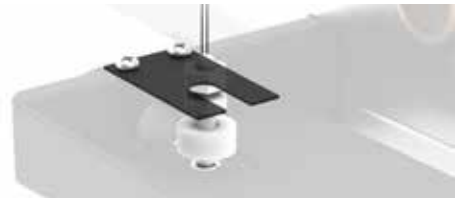

bracket for mounting the level sensor in the condensate tray

CODE	BRIZA 12	BRIZA 22	BRIZA 26
8776 0701		✓	✓

BRIZA 12 BUILT-IN CEILING 2-PIPE

STANDARD DELIVERY
- condensation trap with drain connection
- aluminium-copper heat exchanger with hydrophilic coating
- sturdy casing manufactured from electro-galvanised steel
- tangential EC fan(s)
- stainless steel air filter

PLUG & PLAY
- integrated 230V power supply
- pre-assembled connection set
- temperature control according to selected Plug & Play version

CONNECTION

Standard
- hydronic connections on the left
  G 1/2" connection
- clamp connection for electrical wiring, standard on right side, connects via external 24VDC power supply

Optional

Hydronic right, electric left:
Connection code **R** instead of **L**. No surcharge.

ORDER CODE

BZBC 038 052 12 2 L DDD

- *No Jaga JDPC control system: (leave blank)*
- *Jaga JDPC BMS: D03*
- *Jaga JDPC On / Off: D07*
- *Jaga JDPC SMART BMS 100 TW: D21 TW*
- *Jaga JDPC SMART BMS 100 TB: D21 TB*
- *Jaga JDPC SMART BMS 200 W: D21 2W*
- *Jaga JDPC SMART BMS C 100 TW: D25 TW*
- *Jaga JDPC SMART BMS C 100 TB: D25 TB*
- *Jaga JDPC SMART BMS C 200 W: D25 2W*
- *Length*
- *Height*

AVAILABLE AS AN OPTION
- factory-fitted Jaga JDPC controller unit:
  Jaga JDPC BMS (D03) or Jaga JDPC On / Off (D07)
- valve set: set 295 (with thermo-electric motor) or set 290 (with 2 lockshields)
- stainless steel flexible connections (in pairs)
- power supply: waterproof power supply or DIN-rail power supply
- thermostat (0-10V) outside the unit

Height 052 *2-pipe*

Height 038 *2-pipe*

CONTROL

STANDARD CONTROL SYSTEM: NO JAGA JDPC CONTROL

The fan can be directly controlled via an external 0-10V control signal (thermostat or BMS/domotica). In this case, there is no water temperature sensor, so the fan can start independently of the heat exchanger water temperature.

Optional factory-fitted Jaga JDPC control

A fan convector can optionally be fitted with a JDPC (Jaga Dynamic Product Controller). This controller features an integrated water temperature sensor on the heat exchanger, serving as enablement protection for the fan. The fan only starts when the water temperature suits the requested operating mode. This prevents cold air in heating mode and warm air in cooling mode.

CODE	POSITION	PRE-MOUNTEND			CONTROL	EXTERNAL 0-10 V CONTROL	WATER TEMPERATURE SENSOR	AIR TEMPERATURE SENSOR
		VALVE SET	POWER SUPPLY	CONDENSATE PUMP				
Jaga JDPC BMS - 2-pipe (D03)		-	-	-	-	✓	1	-
Jaga JDPC On / Off - 2-pipe (D07)		-	-	-	-	-	1	-
Jaga JDPC SMART BMS - 2-pipe (D21)		✓	✓	-	Room thermostat	-	1	-
Jaga JDPC SMART BMS C - 2-pipe (D25)		✓	✓	✓	ROOM THERMOSTAT	-	1	-

BRIZA 12 BUILT-IN CEILING 2-PIPE

HEIGHT	LENGTH	TYPE	CONTROL VOLTAGE	AIR FLOW	COOLING TOTAL (condensing) Room temperature 27°C	SENSIBLE COOLING (condensing) Room temperature 27°C	COOLING (non-condensing) Room temperature 27°C	HEATING Room temperature 20°C				SOUND PRESSURE LEVEL	POWER CONSUMPTION	WEIGHT	WATER CONTENT	ORDER CODE
H	L	T	U		7/12	7/12	16/18	35/30	45/40	50/45	55/45					
mm	mm		V	m^3/h	Watts	Watts	Watts	Watts	Watts	Watts	Watts	dB(A)	Watts	kg	L	
BZBC 380	520	12	2	70	279	197	113	247	450	550	596	19.0	1.6	7.0	0.166	BZBC 038 052 12 2 L DDD
			4	111	347	248	142	285	517	633	686	25.2	2.6			
			6	155	415	301	172	324	589	721	781	32.5	4.3			
			8	196	484	355	203	379	688	842	912	39.0	7.2			
			10	235	553	410	235	454	826	1010	1095	44.0	13.0			
	720	12	2	119	488	345	198	401	728	891	966	21.5	2.5	9.0	0.270	BZBC 038 072 12 2 L DDD
			4	189	570	408	234	490	891	1090	1182	27.5	4.3			
			6	245	668	484	277	519	944	1155	1252	34.9	7.2			
			8	315	782	573	329	609	1106	1354	1467	40.7	11.5			
			10	380	911	676	387	748	1358	1662	1802	45.0	18.0			
	1020	12	2	160	804	569	326	644	1171	1433	1553	23.1	2.6	13.0	0.433	BZBC 038 102 12 2 L DDD
			4	243	899	644	369	790	1435	1756	1903	30.0	4.8			
			6	328	1039	753	432	844	1533	1876	2033	38.0	8.0			
			8	419	1221	895	513	989	1797	2199	2383	44.0	14.0			
			10	492	1445	1072	615	1188	2158	2641	2862	48.5	24.0			
	1220	12	2	190	967	684	392	810	1472	1801	1952	26.0	2.8	14.0	0.539	BZBC 038 122 12 2 L DDD
			4	295	1029	737	423	996	1809	2214	2399	31.4	5.5			
			6	410	1267	918	526	1063	1932	2365	2563	38.4	10.3			
			8	512	1560	1143	656	1242	2258	2763	2995	44.2	18.5			
			10	560	1795	1331	763	1480	2690	3292	3568	48.0	28.8			
BZBC 520	520	12	2	89	461	326	187	371	674	825	894	21.0	2.0	8.0	0.332	BZBC 052 052 12 2 L DDD
			4	130	541	387	222	433	787	963	1044	27.0	3.2			
			6	169	641	464	266	522	948	1161	1258	33.9	5.5			
			8	212	754	553	317	594	1079	1321	1432	39.7	9.6			
			10	250	820	608	349	672	1222	1495	1620	44.0	16.8			
	720	12	2	127	787	557	319	610	1108	1356	1470	21.8	2.2	10.0	0.540	BZBC 052 072 12 2 L DDD
			4	193	919	658	377	725	1318	1613	1748	27.2	3.6			
			6	262	1069	775	444	866	1573	1926	2087	34.6	5.7			
			8	320	1221	895	513	992	1803	2207	2392	40.8	9.6			
			10	365	1357	1006	577	1113	2023	2476	2683	45.0	15.6			
	1020	12	2	168	1252	886	508	964	1751	2143	2323	24.0	2.8	14.0	0.866	BZBC 052 102 12 2 L DDD
			4	259	1450	1038	595	1151	2091	2560	2774	30.3	5.4			
			6	353	1703	1234	708	1373	2495	3054	3309	37.7	10.0			
			8	437	1959	1436	823	1581	2874	3517	3811	43.7	18.0			
			10	513	2163	1605	920	1775	3225	3947	4277	48.0	28.8			
	1220	12	2	200	1545	1093	627	1151	2092	2560	2774	26.2	2.8	15.0	1.078	BZBC 052 122 12 2 L DDD
			4	297	1817	1300	746	1434	2605	3188	3455	32.0	5.5			
			6	396	2142	1552	890	1713	3113	3810	4130	39.0	10.0			
			8	500	2431	1782	1022	1978	3594	4399	4768	44.5	18.0			
			10	583	2702	2004	1149	2216	4026	4928	5340	48.5	28.8			

Output measured in accordance with EN 16430
Noise measurement according to ISO 3741:2010, at a 2-m distance from the unit and with an assumed room attenuation of 8 dB(A)/room volume 100 m^3 / reverberation time 0.5 sec.

Calculation for other temperatures: jaga.com/selection-tools
Discover the Jaga BIM platform: jaga.thorbiq.io/BEnl/selector/

BRIZA 12 BUILT-IN CEILING 4-PIPE

STANDARD DELIVERY
- condensation trap with drain connection
- aluminium-copper heat exchanger with hydrophilic coating
- sturdy casing manufactured from electro-galvanised steel
- tangential EC fan(s)
- stainless steel air filter

PLUG & PLAY
- integrated 230V power supply
- pre-mounted connection sets
- temperature control according to selected Plug & Play version

CONNECTION

Standard
- hydronic connections on the left
  large heat exchanger: G 1/2" connection
  small heat exchanger: G 1/2" connection
- clamp connection for electrical wiring, standard on right side, connects via external 24VDC power supply

Optional

Hydronic right, electric left:
Connection code **R** instead of **L**. No surcharge.

ORDER CODE

BZBC 038 052 12 4 L DDD

- DDD
  - *No Jaga JDPC control system: (leave blank)*
  - *Jaga JDPC BMS: D04*
  - *Jaga JDPC On / Off: D08*
  - *Jaga JDPC SMART BMS 100 TW: D22 TW*
  - *Jaga JDPC SMART BMS 100 TB: D22 TB*
  - *Jaga JDPC SMART BMS 200 W: D22 2W*
  - *Jaga JDPC SMART BMS C 100 TW: D26 TW*
  - *Jaga JDPC SMART BMS C 100 TB: D26 TB*
  - *Jaga JDPC SMART BMS C 200 W: D26 2W*
- *Length*
- *Height*

AVAILABLE AS AN OPTION
- factory-fitted Jaga JDPC controller unit:
  Jaga JDPC BMS (D04) or Jaga JDPC On / Off (D08)
- 2 x valve set: set 295 (with thermo-electric motor) or
  set 290 (with 2 lockshields)
- 2 x stainless steel flexible connections (in pairs)
- power supply: waterproof power supply or DIN-rail power supply
- thermostat (0-10V) outside the unit

Height 052 *4-pipe*

Height 038 *4-pipe*

CONTROL

STANDARD CONTROL SYSTEM: NO JAGA JDPC CONTROL

The fan can be directly controlled via an external 0-10V control signal (thermostat or BMS/domotica). In this case, there is no water temperature sensor, so the fan can start independently of the heat exchanger water temperature.

Optional factory-fitted Jaga JDPC control

A fan convector can optionally be fitted with a JDPC (Jaga Dynamic Product Controller). This controller features an integrated water temperature sensor on the heat exchanger, serving as enablement protection for the fan. The fan only starts when the water temperature suits the requested operating mode. This prevents cold air in heating mode and warm air in cooling mode.

CODE	POSITION	PRE-MOUNTEND			CONTROL	EXTERNAL 0-10 V CONTROL	WATER TEMPERATURE SENSOR	AIR TEMPERATURE SENSOR
		VALVE SET	POWER SUPPLY	CONDENSATE PUMP				
Jaga JDPC BMS - 4-pipe (D04)	❄ ❄ ♨	-	-	-	-	✓	2	-
Jaga JDPC On / Off - 4-pipe (D08)	❄ ❄ ♨	-	-	-	-	-	2	-
Jaga JDPC SMART BMS - 4-pipe (D22)	❄ ♨	✓	✓	-	Room thermostat	-	2	-
Jaga JDPC SMART BMS C - 4-pipe (D26)	❄ ❄ ♨	✓	✓	✓	Room thermostat	-	2	-

BRIZA 12 BUILT-IN CEILING 4-PIPE

HEIGHT	LENGTH	TYPE	CONTROL VOLTAGE	AIR FLOW	COOLING TOTAL (condensing) Room temperature 27°C	SENSIBLE COOLING (condensing) Room temperature 27°C	COOLING (non-condensing) Room temperature 27°C	HEATING Room temperature 20°C				SOUND PRESSURE LEVEL	POWER CONSUMPTION	WEIGHT	WATER CONTENT	ORDER CODE
H	L	T	U		7/12	7/12	16/18	35/30	45/40	50/45	55/45					
mm	mm	mm	V	m^3/h	Watts	Watts	Watts	Watts	Watts	Watts	Watts	dB(A)	Watts	kg	L	
BZBC 380	520	12	2	32	247	174	100	198	359	440	477	19.0	1.8	9.0	0.332	BZBC 038 052 12 4 L DDD
			4	67	291	208	119	227	413	505	548	25.2	3.0			
			6	95	338	245	140	261	473	579	628	32.5	4.8			
			8	128	388	285	163	304	552	676	732	39.0	8.0			
			10	157	442	328	188	363	660	808	876	44.0	13.7			
	720	12	2	57	406	287	165	332	604	739	801	21.5	2.0	11.4	0.54	BZBC 038 072 12 4 L DDD
			4	101	468	335	192	370	673	824	893	27.5	3.4			
			6	158	535	388	222	416	756	925	1003	34.9	5.7			
			8	213	619	454	260	486	883	1081	1172	40.7	8.4			
			10	252	728	540	310	598	1087	1330	1441	45.0	14.4			
	1020	12	2	80	471	666	270	520	945	1157	1254	23.1	2.3	15.7	0.866	BZBC 038 102 12 4 L DDD
			4	164	531	742	305	593	1077	1318	1428	30.0	4.1			
			6	242	607	838	348	676	1228	1503	1629	38.0	7.4			
			8	305	712	971	408	788	1433	1753	1900	44.0	12.6			
			10	400	857	1156	492	950	1726	2113	2290	48.5	20.9			
	1220	12	2	98	818	578	332	645	1172	1434	1554	26.0	2.5	17.0	1.078	BZBC 038 122 12 4 L DDD
			4	174	927	663	380	742	1348	1650	1788	31.4	4.5			
			6	249	1054	763	438	849	1543	1888	2046	38.4	9.0			
			8	318	1218	893	512	989	1797	2200	2384	44.2	17.0			
			10	420	1438	1067	612	1185	2152	2634	2855	48.0	28.8			
BZBC 520	520	12	2	30	353	250	143	158	288	352	382	21.0	1.6	10.5	0.498	BZBC 052 052 12 4 L DDD
			4	74	413	295	169	179	326	399	433	27.0	2.2			
			6	118	489	354	203	205	373	457	495	33.9	3.6			
			8	151	552	405	232	240	436	533	578	39.7	6.3			
			10	188	615	457	262	286	520	637	690	44.0	10.3			
	720	12	2	79	575	407	233	260	472	578	626	21.8	2.1	12.7	0.81	BZBC 052 072 12 4 L DDD
			4	135	684	490	281	291	529	647	702	27.2	3.4			
			6	185	805	583	334	325	591	723	784	34.6	5.9			
			8	251	921	675	387	384	697	853	925	40.8	10.0			
			10	282	1018	755	433	471	856	1047	1135	45.0	15.6			
	1020	12	2	123	941	666	382	408	742	908	984	24.0	2.3	17.0	1.299	BZBC 052 102 12 4 L DDD
			4	201	1094	783	449	468	850	1040	1128	30.3	4.2			
			6	286	1287	932	535	532	967	1183	1282	37.7	7.5			
			8	360	1462	1072	615	619	1125	1377	1493	43.7	12.8			
			10	423	1623	1204	690	748	1359	1664	1803	48.0	22.3			
	1220	12	2	139	1147	811	465	495	900	1102	1194	26.2	2.7	18.4	1.617	BZBC 052 122 12 4 L DDD
			4	251	1367	979	561	585	1062	1300	1409	32.0	5.2			
			6	334	1604	1162	666	668	1214	1486	1610	39.0	9.1			
			8	432	1832	1343	770	780	1417	1735	1880	44.5	16.0			
			10	508	2026	1502	862	933	1695	2074	2248	48.5	27.3			

Output measured in accordance with EN 16430
Noise measurement according to ISO 3741:2010, at a 2-m distance from the unit and with an assumed room attenuation of 8 dB(A)/room volume 100 m^3 / reverberation time 0.5 sec.

Calculation for other temperatures: jaga.com/selection-tools
Discover the Jaga BIM platform: jaga.thorbiq.io/BEnl/selector/

BRIZA 22 BUILT-IN CEILING 2-PIPE

SOON AVAILABLE
Plug & Play Smart BMS

STANDARD DELIVERY

- sturdy casing manufactured from electro-galvanised steel
- replaceable polypropylene dust filter (class G2)
- centrifugal fan(s) with twin inlet
- aluminium-copper heat exchanger with hydrophilic coating
- condensation trap with drain connection

PLUG & PLAY

- integrated 230V power supply
- pre-assembled connection set
- temperature control according to selected Plug & Play version

CONNECTION

Standard

- hydronic connections on the left, G 3/4" connection
- clamp connector for electric connection 230 VAC, to connect via an external power supply, on the right hand side.

Optional

Hydronic right, electric left:
Connection code **R** instead of **L**. No surcharge.

ORDER CODE

BABC 055 055 22 XX 2 LR G2 DDD

- *No Jaga JDPC control system: (leave blank)*
- *Jaga JDPC BMS: D03*
- *Jaga JDPC On / Off: D07*
- *Jaga JDPC SMART BMS 100 TW: D21 TW*
- *Jaga JDPC SMART BMS 100 TB: D21 TB*
- *Jaga JDPC SMART BMS 200 W: D21 2W*
- *Jaga JDPC SMART BMS C 100 TW:D25 TW*
- *Jaga JDPC SMART BMS C 100 TB: D25 TB*
- *Jaga JDPC SMART BMS C 200 W: D25 2W*
- *Model: BT, FT*
- *Length*

AVAILABLE AS AN OPTION

- factory-fitted Jaga JDPC controller unit:
  Jaga JDPC BMS (D03) or Jaga JDPC On / Off (D07)
- valve set: set 301 (with thermo-electric motor) or set 302 (with 2 lockshields)
- stainless steel flexible connections (in pairs)
- thermostat (0-10V) outside the unit

FT *(Front Top)*

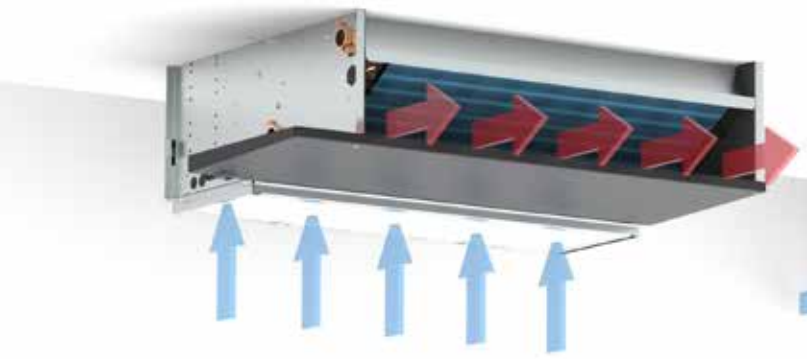

BT *(Bottom-Top)*

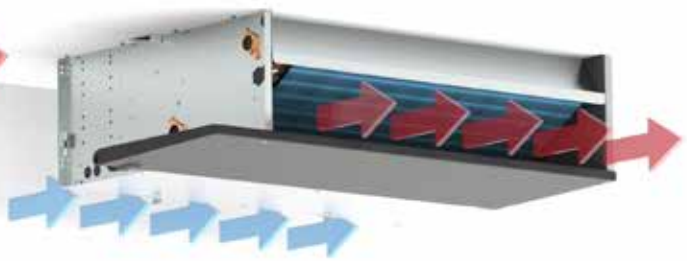

CONTROL

STANDARD CONTROL SYSTEM: NO JAGA JDPC CONTROL

The fan can be directly controlled via an external 0-10V control signal (thermostat or BMS/domotica). In this case, there is no water temperature sensor, so the fan can start independently of the heat exchanger water temperature.

Optional factory-fitted Jaga JDPC control

A fan convector can optionally be fitted with a JDPC (Jaga Dynamic Product Controller). This controller features an integrated water temperature sensor on the heat exchanger, serving as enablement protection for the fan. The fan only starts when the water temperature suits the requested operating mode. This prevents cold air in heating mode and warm air in cooling mode.

CODE	POSITION	PRE-MOUNTEND			CONTROL	EXTERNAL 0-10 V CONTROL	WATER TEMPERATURE SENSOR	AIR TEMPERATURE SENSOR
		VALVE SET	POWER SUPPLY	CONDENSATE PUMP				
Jaga JDPC BMS - 2-pipe(D03)	❄ ❄ ♨	-	-	-	-	✓	1	-
Jaga JDPC On / Off - 2-pipe (D07)	❄ ❄ ♨	-	-	-	-	-	1	-
Jaga JDPC Smart BMS - 2-pipe (D21)	❄ ♨	✓	✓	-	Room thermostat	-	1	-
Jaga JDPC SMART BMS C - 2-pipe (D25)	❄ ❄ ♨	✓	✓	✓	Room thermostat	-	1	-

BRIZA 22 BUILT-IN CEILING 2-PIPE

HEIGHT	LENGTH	TYPE	MAX. MEASURED CURRENT	CONTROL VOLTAGE	AIR FLOW	COOLING TOTAL (condensing) Room temperature 27°C	SENSIBLE COOLING (condensing) Room temperature 27°C	COOLING (non-condensing) Room temperature 27°C	HEATING Room temperature 20°C				SOUND PRESSURE LEVEL	POWER CONSUMPTION	WEIGHT	WATER CONTENT	ORDER CODE
H	L	T	I	U		7/12	7/12	16/18	35/30	45/40	50/45	55/45					
mm	mm		A	V	m^3/h	Watts	Watts	Watts	Watts	Watts	Watts	Watts	dB(A)	Watts	kg	l	
BABC 550	550	22	0.06	2	134	997	719	390	532	978	1202	1305	25 5	3.7	17.0	1.2	BABC 055 055 22 XX 2 LR G2 DDD
			0.09	4	254	1725	1243	674	943	1735	2133	2315	35 0	8.7			
			0.16	6	355	2215	1596	866	1231	2265	2784	3022	42 5	17.2			
			0.26	8	450	2715	1957	1061	1503	2765	2299	3690	46 5	31.1			
			0.36	10	500	3033	2186	1185	1660	3055	3855	4076	51 0	41.1			
	750	22	0.05	2	178	1445	1041	508	766	1375	1676	1814	20 5	3.8	21.5	1.8	BABC 055 075 22 XX 2 LR G2 DDD
			0.09	4	327	2475	1784	870	1350	2424	2955	3197	29 5	8.8			
			0.17	6	456	3258	2348	1146	1787	3209	3912	4233	39 0	17.7			
			0.29	8	579	3901	2811	1372	2139	3841	4683	5067	45 0	31.9			
			0.41	10	681	4358	3141	1533	2384	4280	5218	5646	49 0	46.4			
	950	22	0.05	2	247	1882	1356	747	960	1776	2188	2377	22 0	3.9	27.0	2.2	BABC 055 095 22 XX 2 LR G2 DDD
			0.10	4	413	3189	2298	1266	1650	3054	3761	4086	29 5	9.9			
			0.19	6	565	4221	3042	1675	2200	4072	5015	5448	37 0	20.6			
			0.33	8	707	5040	3632	2000	2642	4889	6021	6541	42 5	35.9			
			0.44	10	809	5543	3995	2200	2918	5399	6649	7223	46 5	51.2			
	1250	22	0.12	2	334	2172	1565	787	1340	2426	2965	2311	28 0	7.2	35.5	3.1	BABC 055 125 22 XX 2 LR G2 DDD
			0.19	4	614	3771	2718	1367	2304	4170	5097	5520	36 0	17.5			
			0.31	6	840	4999	3603	1812	2997	5424	6630	7181	43 0	35.7			
			0.48	8	1072	6209	4475	2251	3634	6577	8038	8706	49 0	62.8			
			0.64	10	1226	6985	5034	2533	4016	7267	8882	9621	52 5	88.5			
	1550	22	0.08	2	392	2420	1744	851	1373	2466	3006	3252	25 0	7.2	44.0	4.1	BABC 055 155 22 XX 2 LR G2 DDD
			0.15	4	706	4358	3140	1533	2445	4390	5351	5790	34 0	17.8			
			0.31	6	990	6048	4359	2127	3374	6059	7386	7992	41 0	37.1			
			0.55	8	1252	7562	5450	2660	4202	7547	9199	9954	47 0	65.8			
			0.73	10	1436	8596	6195	3023	4765	8558	10432	11287	51 0	95.0			
	1900	22	0.15	2	549	4085	2943	1450	2217	3985	4859	5228	31 5	11.1	56.0	4.5	BABC 055 190 22 XX 2 LR G2 DDD
			0.26	4	972	7003	5047	2486	3812	6851	8354	9040	39 0	25.9			
			0.47	6	1347	9411	6782	3341	5140	9238	11265	12190	46 5	52.8			
			0.77	8	1700	11533	8312	4094	6323	11364	13856	14994	52 0	93.0			
			1.00	10	1922	12790	9218	4540	7030	12634	15405	16670	55 0	131.5			

Output measured in accordance with EN 1397
Noise measurement according to ISO 3741:2010, at a 2-m distance from the unit and with an assumed room attenuation of 8 dB(A)/room volume 100 m^3 / reverberation time 0.5 sec.

Calculation for other temperatures: jaga.com/selection-tools
Discover the Jaga BIM platform: jaga.thorbiq.io/BEnl/selector/

BRIZA 22 BUILT-IN CEILING 4-PIPE

SOON AVAILABLE
Plug & Play Smart BMS

STANDARD DELIVERY

- sturdy casing manufactured from electro-galvanised steel
- replaceable polypropylene dust filter (class G2)
- centrifugal fan(s) with twin inlet
- aluminium-copper heat exchanger with hydrophilic coating
- condensation trap with drain connection

PLUG & PLAY

- integrated 230V power supply
- pre-mounted connection sets
- temperature control according to selected Plug & Play version

CONNECTION

Standard

- hydronic connections on the left
  large heat exchanger: G 3/4" connection
  small heat exchanger: G 1/2" connection
- clamp connector for electric connection 230 VAC, to connect via an external power supply, on the right hand side.

Optional

Hydronic right, electric left:
Connection code **R** instead of **L**. No surcharge.

ORDER CODE

BABC 055 055 22 XX 4 LR G2 DDD

- DDD
  - *No Jaga JDPC control system: (leave blank)*
  - *Jaga JDPC BMS: D04*
  - *Jaga JDPC On / Off: D08*
  - *Jaga JDPC SMART BMS 100 TW: D22 TW*
  - *Jaga JDPC SMART BMS 100 TB: D22 TB*
  - *Jaga JDPC SMART BMS 200 W: D22 2W*
  - *Jaga JDPC SMART BMS C 100 TW: D26 TW*
  - *Jaga JDPC SMART BMS C 100 TB: D26 TB*
  - *Jaga JDPC SMART BMS C 200 W: D26 2W*
- XX: *Model: BT, FT*
- 055: *Length*

AVAILABLE AS AN OPTION

- factory-fitted Jaga JDPC controller unit:
  Jaga JDPC BMS (D04) or Jaga JDPC On / Off (D08)
- valve set: set 301 and 98 (with thermo-electric motor) or
  set 302 en 99 (with 2 lockshields)
- 2 x stainless steel flexible connections (in pairs)
- thermostat (0-10V) outside the unit

FT *(Front Top)*

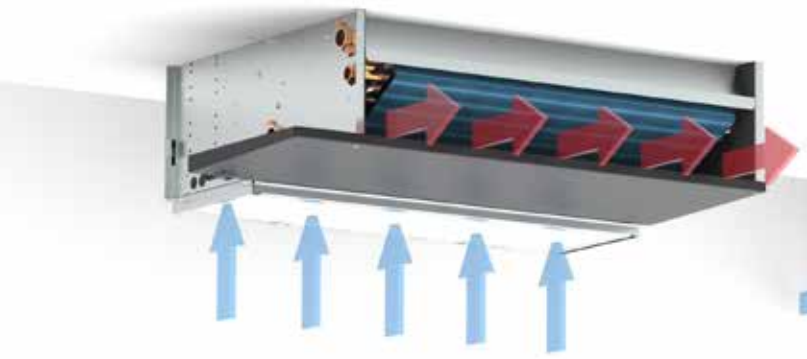

BT *(Bottom-Top)*

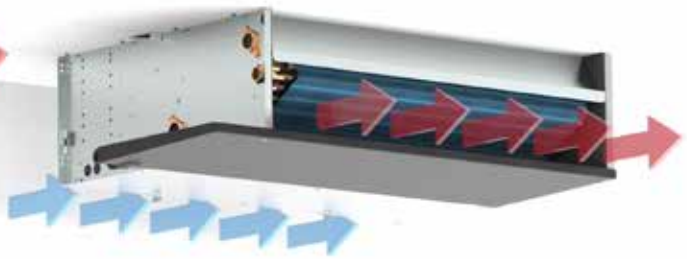

CONTROL

STANDARD CONTROL SYSTEM: NO JAGA JDPC CONTROL

The fan can be directly controlled via an external 0-10V control signal (thermostat or BMS/domotica). In this case, there is no water temperature sensor, so the fan can start independently of the heat exchanger water temperature.

Optional factory-fitted Jaga JDPC control

A fan convector can optionally be fitted with a JDPC (Jaga Dynamic Product Controller). This controller features an integrated water temperature sensor on the heat exchanger, serving as enablement protection for the fan. The fan only starts when the water temperature suits the requested operating mode. This prevents cold air in heating mode and warm air in cooling mode.

CODE	POSITION	PRE-MOUNTEND			CONTROL	EXTERNAL 0-10 V CONTROL	WATER TEMPERATURE SENSOR	AIR TEMPERATURE SENSOR
		VALVE SET	POWER SUPPLY	CONDENSATE PUMP				
Jaga JDPC BMS - 4-pipe (D04)	❄ ❄ 🔥	-	-	-	-	✓	2	-
Jaga JDPC On / Off - 4-pipe (D08)	❄ ❄ 🔥	-	-	-	-	-	2	-
Jaga JDPC SMART BMS - 4-pipe (D22)	❄ 🔥	✓	✓	-	Room thermostat	-	2	-
Jaga JDPC SMART BMS C - 4-pipe (D26)	❄ ❄ 🔥	✓	✓	✓	Room thermostat	-	2	-

BRIZA 22 BUILT-IN CEILING 4-PIPE

HEIGHT	LENGTH	TYPE	MAX. MEASURED CURRENT	CONTROL VOLTAGE	AIR FLOW	COOLING TOTAL (condensing) Room temperature 27°C	SENSIBLE COOLING (condensing) Room temperature 27°C	COOLING (non-condensing) Room temperature 27°C	HEATING Room temperature 20°C				SOUND PRESSURE LEVEL	POWER CONSUMPTION	WEIGHT	WATER CONTENT	ORDER CODE
H	L	T	I	U		7/12	7/12	16/18	35/30	45/40	50/45	55/45					
mm	mm		A	V	m^3/h	Watts	Watts	Watts	Watts	Watts	Watts	Watts	dB(A)	Watts	kg	l	
BABC 550	550	22	0.06	2	134	997	719	390	281	553	695	761	25 5	3.7	17.8	1.5	BABC 055 055 22 XX 4 LR G2 DDD
			0.09	4	254	1725	1243	674	388	763	959	1050	35 0	8.7			
			0.16	6	355	2215	1596	866	465	915	1151	1260	42 5	17.2			
			0.26	8	450	2715	1957	1061	529	1040	1308	1432	46 5	31.1			
			0.36	10	500	3033	2186	1185	558	1098	1380	1512	51 0	41.1			
	750	22	0.05	2	178	1445	1041	508	343	675	848	929	20 5	3.8	22.7	2.2	BABC 055 075 22 XX 4 LR G2 DDD
			0.09	4	327	2475	1784	870	537	1056	1327	1454	29 5	8.8			
			0.17	6	456	3258	2348	1146	661	1299	1633	1788	39 0	17.7			
			0.29	8	579	3901	2811	1372	745	1465	1841	2016	45 0	31.9			
			0.41	10	681	4358	3141	1533	795	1562	1964	2151	49 0	46.4			
	950	22	0.05	2	247	1882	1356	747	479	947	1193	1308	22 0	3.9	28.6	2.8	BABC 055 095 22 XX 4 LR G2 DDD
			0.10	4	413	3189	2298	1266	656	1376	1733	1900	29 5	9.9			
			0.19	6	565	4221	3042	1675	843	1666	2098	2300	37 0	20.6			
			0.33	8	707	5040	3632	2000	942	1862	2346	2571	42 5	35.9			
			0.44	10	809	5543	3995	2200	995	1968	2479	2717	46 5	51.2			
	1250	22	0.12	2	334	2172	1565	787	823	1592	1990	2174	28 0	7.2	37.7	3.8	BABC 055 125 22 XX 4 LR G2 DDD
			0.19	4	614	3771	2718	1367	1146	2216	2770	3027	36 0	17.5			
			0.31	6	840	4999	3603	1812	1363	2636	3295	3601	43 0	35.7			
			0.48	8	1072	6209	4475	2251	1547	2992	3740	4087	49 0	62.8			
			0.64	10	1226	6985	5034	2533	1648	3186	3983	4353	52 5	88.5			
	1550	22	0.08	2	392	2420	1744	851	806	1545	1925	2102	25 0	7.2	46.8	4.9	BABC 055 155 22 XX 4 LR G2 DDD
			0.15	4	706	4358	3140	1533	1264	2423	3020	3297	34 0	17.8			
			0.31	6	990	6048	4359	2127	1625	3115	3883	4238	41 0	37.1			
			0.55	8	1252	7562	5450	2660	1915	3671	4575	4994	47 0	65.8			
			0.73	10	1436	8596	6195	3023	2093	4012	5000	5457	51 0	95.0			
	1900	22	0.15	2	549	4085	2943	1450	1333	2560	3193	3486	31 5	11.1	59.5	5.5	BABC 055 190 22 XX 4 LR G2 DDD
			0.26	4	972	7003	5047	2486	1982	3807	4748	5184	39 0	25.9			
			0.47	6	1347	9411	6782	3341	2462	4729	5897	6439	46 5	52.8			
			0.77	8	1700	11533	8312	4094	2834	5443	6788	7411	52 0	93.0			
			1.00	10	1922	12790	9218	4540	3027	5814	7250	7916	55 0	131.5			

Output measured in accordance with EN 1397
Noise measurement according to ISO 3741:2010, at a 2-m distance from the unit and with an assumed room attenuation of 8 dB(A)/room volume 100 m^3 / reverberation time 0.5 sec.

Calculation for other temperatures: jaga.com/selection-tools
Discover the Jaga BIM platform: jaga.thorbiq.io/BEnl/selector/

BRIZA 26 BUILT-IN CEILING 2-PIPE

SOON AVAILABLE
Plug & Play Smart BMS

STANDARD DELIVERY

- sturdy casing manufactured from electro-galvanised steel
- replaceable polypropylene dust filter (class G2)
- centrifugal fan(s) with twin inlet
- aluminium-copper heat exchanger with hydrophilic coating
- condensation trap with drain connection

PLUG & PLAY

- integrated 230V power supply
- pre-assembled connection set
- temperature control according to selected Plug & Play version

CONNECTION

Standard

- hydronic connections on the left, G 3/4" connection
- clamp connector for electric connection 230 VAC, to connect via an external power supply, on the right hand side.

Optional

Hydronic right, electric left:
Connection code **R** instead of **L**. No surcharge.

ORDER CODE

BBBC 063 055 22 XX 2 LR G2 DDD

- *No Jaga JDPC control system: (leave blank)*
- *Jaga JDPC BMS: D03*
- *Jaga JDPC On / Off: D07*
- *Jaga JDPC SMART BMS 100 TW: D21 TW*
- *Jaga JDPC SMART BMS 100 TB: D21 TB*
- *Jaga JDPC SMART BMS 200 W: D21 2W*
- *Jaga JDPC SMART BMS C 100 TW:D25 TW*
- *Jaga JDPC SMART BMS C 100 TB: D25 TB*
- *Jaga JDPC SMART BMS C 200 W: D25 2W*
- *Model: BT, FT*
- *Length*

AVAILABLE AS AN OPTION

- factory-fitted Jaga JDPC controller unit:
  Jaga JDPC BMS (D03) of Jaga JDPC On / Off (D07)
- valve set: set 301 (with thermo-electric motor) or set 302 (with 2 lockshields)
- stainless steel flexible connections (in pairs)
- thermostat (0-10V) outside the unit

FT *(Front Top)*

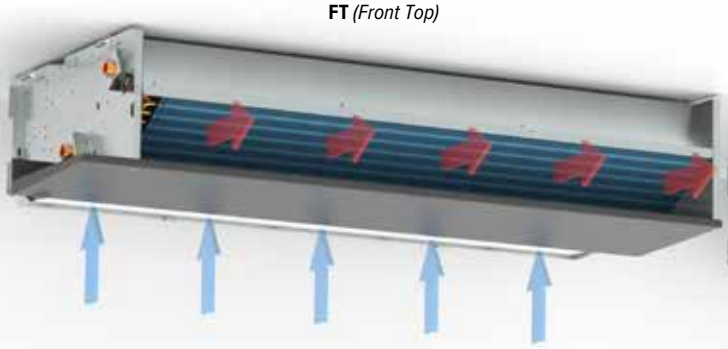

BT *(Bottom-Top)*

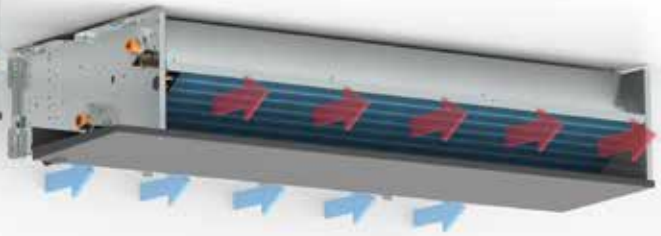

CONTROL

STANDARD CONTROL SYSTEM: NO JAGA JDPC CONTROL

The fan can be directly controlled via an external 0-10V control signal (thermostat or BMS/domotica). In this case, there is no water temperature sensor, so the fan can start independently of the heat exchanger water temperature.

Optional factory-fitted Jaga JDPC control

A fan convector can optionally be fitted with a JDPC (Jaga Dynamic Product Controller). This controller features an integrated water temperature sensor on the heat exchanger, serving as enablement protection for the fan. The fan only starts when the water temperature suits the requested operating mode. This prevents cold air in heating mode and warm air in cooling mode.

CODE	POSITION	PRE-MOUNTEND			CONTROL	EXTERNAL 0-10 V CONTROL	WATER TEMPERATURE SENSOR	AIR TEMPERATURE SENSOR
		VALVE SET	POWER SUPPLY	CONDENSATE PUMP				
Jaga JDPC BMS - 2-pipe (D03)		-	-	-	-	✓	1	-
Jaga JDPC On / Off - 2-pipe (D07)		-	-	-	-	-	1	-
Jaga JDPC SMART BMS - 2-pipe (D21)		✓	✓	-	Room thermostat	-	1	-
Jaga JDPC SMART BMS C - 2-pipe (D25)		✓	✓	✓	Room thermostat	-	1	-

BRIZA 26 BUILT-IN CEILING 2-PIPE

	HEIGHT	LENGTH	TYPE	MAX. MEASURED CURRENT	CONTROL VOLTAGE	AIR FLOW	COOLING TOTAL (condensing) Room temperature 27°C	SENSIBLE COOLING (condensing) Room temperature 27°C	COOLING (non-condensing) Room temperature 27°C	HEATING Room temperature 20°C				SOUND PRESSURE LEVEL	POWER CONSUMPTION	WEIGHT	WATER CONTENT	ORDER CODE
	H	**L**	**T**	**I**	**U**		**7/12**	**7/12**	**16/18**	**35/30**	**45/40**	**50/45**	**55/45**					
	mm	*mm*	*mm*	*A*	*V*	*m³/h*	*Watts*	*Watts*	*Watts*	*Watts*	*Watts*	*Watts*	*Watts*	*dB(A)*	*Watts*	*kg*	*l*	
BBBC	**560**	**1250**	**26**	0.12	**2**	334	2825	1963	988	1519	2749	3360	3640	27.5	7.2	35.5	4.71	BBBC 056 125 26 XX 2 LR G2 DDD
				0.19	**4**	614	4974	3457	1739	2651	4798	5865	6352	38.0	17.5			
				0.31	**6**	840	6626	4605	2317	3508	6350	7761	8406	45.5	35.7			
				0.48	**8**	1072	8255	5737	2887	4341	7857	9603	10401	50.5	62.8			
				0.64	**10**	1226	9301	6464	3253	4868	8811	10769	11664	53.5	88.5			
		1550	**26**	0.08	**2**	392	2991	2078	1014	1558	2798	3411	3691	25.0	7.2	44.0	6.07	BBBC 056 155 26 XX 2 LR G2 DDD
				0.15	**4**	706	5335	3708	1809	2795	5020	6119	6621	36.5	17.8			
				0.31	**6**	990	7391	5137	2507	3890	6985	8515	9213	43.5	37.1			
				0.55	**8**	1252	9243	6423	3135	4884	8770	10690	11567	49.0	65.8			
				0.73	**10**	1436	10512	7306	3565	5570	10002	12193	13193	51.5	95.0			
		1900	**26**	0.15	**2**	549	4245	2950	1482	2110	3846	4712	5109	29.0	11.1	56.0	7.5	BBBC 056 190 26 XX 2 LR G2 DDD
				0.26	**4**	972	7429	5163	2593	3719	6777	8303	9002	38.5	25.9			
				0.47	**6**	1347	10191	7082	3557	5117	9326	11425	12387	46.0	52.8			
				0.77	**8**	1700	12752	8862	4450	6416	11694	14326	15532	51.5	93.0			
				1.00	**10**	1922	14335	9962	5003	7221	13161	16124	17481	54.5	131.5			

Output measured in accordance with EN 1397
Noise measurement according to ISO 3741:2010, at a 2-m distance from the unit and with an assumed room attenuation of 8 dB(A)/room volume 100 m³ / reverberation time 0.5 sec.

Calculation for other temperatures: jaga.com/selection-tools
Discover the Jaga BIM platform: jaga.thorbiq.io/BEnl/selector/

BRIZA 26 BUILT-IN CEILING 4-PIPE

SOON AVAILABLE
Plug & Play Smart BMS

STANDARD DELIVERY

- sturdy casing manufactured from electro-galvanised steel
- replaceable polypropylene dust filter (class G2)
- centrifugal fan(s) with twin inlet
- aluminium-copper heat exchanger with hydrophilic coating
- condensation trap with drain connection

PLUG & PLAY

- integrated 230V power supply
- pre-mounted connection sets
- temperature control according to selected Plug & Play version

CONNECTION

Standard

- hydronic connections on the left
  large heat exchanger: G 3/4" connection
  small heat exchanger: G 1/2" connection
- clamp connector for electric connection 230 VAC, to connect via an external power supply, on the right hand side.

Optional

Hydronic right, electric left:
Connection code **R** instead of **L**. No surcharge.

ORDER CODE

BBBC 055 055 22 XX 4 LR G2 DDD

- *No Jaga JDPC control system: (leave blank)*
- *Jaga JDPC BMS: D04*
- *Jaga JDPC On / Off: D08*
- *Jaga JDPC SMART BMS 100 TW: D22 TW*
- *Jaga JDPC SMART BMS 100 TB: D22 TB*
- *Jaga JDPC SMART BMS 200 W: D22 2W*
- *Jaga JDPC SMART BMS C 100 TW:D26 TW*
- *Jaga JDPC SMART BMS C 100 TB: D26 TB*
- *Jaga JDPC SMART BMS C 200 W: D26 2W*

Model: BT, FT

Length

AVAILABLE AS AN OPTION

- factory-fitted Jaga JDPC controller unit:
  Jaga JDPC BMS (D04) or Jaga JDPC On / Off (D08)
- valve set: set 301 and 98 (with thermo-electric motor) or
  set 302 and 99 (with 2 lockshields)
- 2 x stainless steel flexible connections (in pairs)
- thermostat (0-10V) outside the unit

FT *(Front Top)*

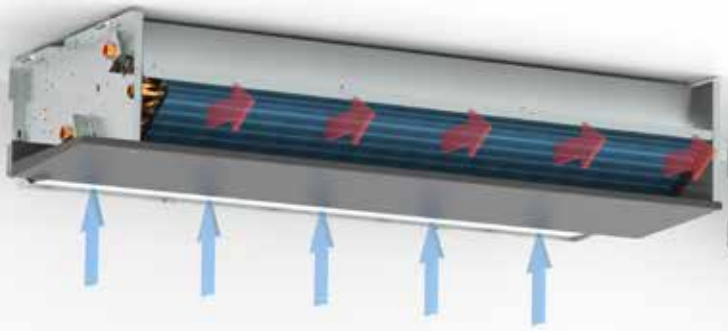

BT *(Bottom-Top)*

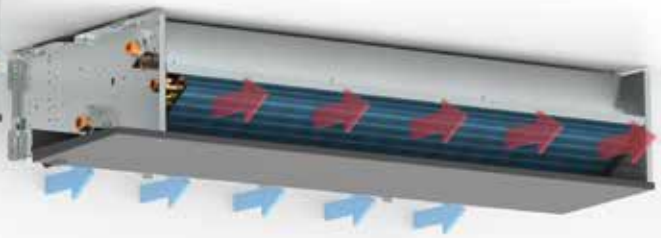

CONTROL

STANDARD CONTROL SYSTEM: NO JAGA JDPC CONTROL

The fan can be directly controlled via an external 0-10V control signal (thermostat or BMS/domotica). In this case, there is no water temperature sensor, so the fan can start independently of the heat exchanger water temperature.

Optional factory-fitted Jaga JDPC control

A fan convector can optionally be fitted with a JDPC (Jaga Dynamic Product Controller). This controller features an integrated water temperature sensor on the heat exchanger, serving as enablement protection for the fan. The fan only starts when the water temperature suits the requested operating mode. This prevents cold air in heating mode and warm air in cooling mode.

CODE	POSITION	PRE-MOUNTEND			CONTROL	EXTERNAL 0-10 V CONTROL	WATER TEMPERATURE SENSOR	AIR TEMPERATURE SENSOR
		VALVE SET	POWER SUPPLY	CONDENSATE PUMP				
Jaga JDPC BMS - 4-pipe (D04)		-	-	-	-	✓	2	-
Jaga JDPC On / Off - 4-pipe (D08)		-	-	-	-	-	2	-
Jaga JDPC SMART BMS - 4-pipe (D22)		✓	✓	-	Room thermostat	-	2	-
Jaga JDPC SMART BMS C - 4-pipe (D26)		✓	✓	✓	Room thermostat	-	2	-

BRIZA 26 BUILT-IN CEILING 4-PIPE

	HEIGHT	LENGTH	TYPE	MAX. MEASURED CURRENT	CONTROL VOLTAGE	AIR FLOW	COOLING TOTAL (condensing) Room temperature 27°C	SENSIBLE COOLING (condensing) Room temperature 27°C	COOLING (non-condensing) Room temperature 27°C	HEATING Room temperature 20°C				SOUND PRESSURE LEVEL	POWER CONSUMPTION	WEIGHT	WATER CONTENT	ORDER CODE
	H	**L**	**T**	**I**	**U**		**7/12**	**7/12**	**16/18**	**35/30**	**45/40**	**50/45**	**55/45**					
	mm	*mm*	*mm*	*A*	*V*	*m³/h*	*Watts*	*Watts*	*Watts*	*Watts*	*Watts*	*Watts*	*Watts*	*dB(A)*	*Watts*	*kg*	*l*	
BBBC	**560**	**1250**	**26**	0.12	**2**	334	2825	1963	988	823	1592	1990	2174	27,5	7,2		5.40	BBBC 056 125 26 XX 4 LR G2 DDD
				0.19	**4**	614	4974	3457	1739	1146	2216	2770	3028	38,0	17,5			
				0.31	**6**	840	6626	4605	2317	1363	2636	3295	3601	45,5	35,7			
				0.48	**8**	1072	8255	5737	2887	1547	2992	3740	4088	50,5	62,8			
				0.64	**10**	1226	9301	6464	3253	1647	3186	3983	4353	53,5	88,5			
		1550	**26**	0.08	**2**	392	2991	2078	1014	805	1545	1926	2103	25,0	7,2		6.92	BBBC 056 155 26 XX 4 LR G2 DDD
				0.15	**4**	706	5335	3708	1809	1263	2423	3021	3298	36,5	17,8			
				0.31	**6**	990	7391	5137	2507	1623	3115	3884	4240	43,5	37,1			
				0.55	**8**	1252	9243	6423	3135	1913	3671	4577	4996	49,0	65,8			
				0.73	**10**	1436	10512	7306	3565	2090	4012	5002	5460	51,5	95,0			
		1900	**26**	0.15	**2**	549	4245	2950	1482	1314	2560	3208	3509	29,0	11,1		8.51	BBBC 056 190 26 XX 4 LR G2 DDD
				0.26	**4**	972	7429	5163	2593	1955	3807	4770	5218	38,5	25,9			
				0.47	**6**	1347	10191	7082	3557	2428	4729	5925	6481	46,0	52,8			
				0.77	**8**	1700	12752	8862	4450	2795	5443	6820	7460	51,5	93,0			
				1.00	**10**	1922	14335	9962	5003	2985	5814	7285	7969	54,5	131,5			

Output measured in accordance with EN 1397
Noise measurement according to ISO 3741:2010, at a 2-m distance from the unit and with an assumed room attenuation of 8 dB(A)/room volume 100 m³ / reverberation time 0.5 sec.

Calculation for other temperatures: jaga.com/selection-tools
Discover the Jaga BIM platform: jaga.thorbiq.io/BEnl/selector/

BRIZA BUILT-IN CEILING ACCESSORIES

ADJUSTABLE GRILLE

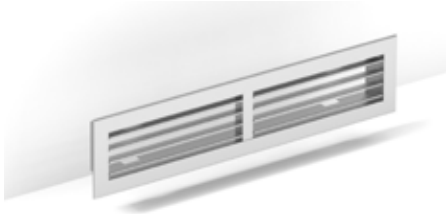

BRIZA 12 BUILT-IN CEILING

CODE	L Briza 12	Installation opening
5627 0001 0001	052	375 x 110
5627 0001 0002	072	575 x 110
5627 0001 0003	102	875 x 110
5627 0001 0004	122	1075 x 110

BRIZA 22 / 26 BUILT-IN CEILING

CODE	L Briza 22 / 26	Installation opening
8789 201	055	500 x 150
8789 202	075	700 x 150
8789 203	095	900 x 150
8789 204	125	1200 x 150
8789 205	155	1500 x 150
8789 206	190	1850 x 150

LINEAR SLOT GRILLE

CODE	L Briza 12	Installation opening
8789 221	052	355 x 90
8789 222	072	555 x 90
8789 223	102	855 x 90
8789 224	122	1055 x 90

CODE	L Briza 22 / 26	Installation opening
8789 225	055	475 x 135
8789 226	075	675 x 135
8789 227	095	875 x 135
8789 228	125	1175 x 135
8789 229	155	1475 x 135
8789 230	190	1825 x 135

BAR GRILLE

CODE	L Briza 12	Installation opening
8789 211	052	355 x 85
8789 212	072	555 x 85
8789 213	102	855 x 85
8789 214	122	1055 x 85

CODE	L Briza 22 / 26	Installation opening
8789 215	055	485 x 137
8789 216	075	685 x 137
8789 217	095	885 x 137
8789 218	125	1185 x 137
8789 219	155	1485 x 137
8789 220	190	1835 x 137

AIR OUTLET CORNER PIECE 90°

TELESCOPIC AIR OUTLET		
≤ 30 mm	≤ 60 mm	L Briza 12
5927 0000 5201	5927 0000 5202	052
5927 0000 7201	5927 0000 7202	072
5927 0001 0201	5927 0001 0202	102
5927 0001 2201	5927 0001 2202	122

CODE	L Briza 22 / 26
8788 0101	055
8788 0102	075
8788 0103	095
8788 0104	125
8788 0105	155
8788 0106	190

AIR INLET CORNER PIECE 90°

CODE	L Briza 22 / 26
8787 0101	550
8787 0102	750
8787 0103	950
8787 0104	1250
8787 0105	1550
8787 0106	1900

AIR MIXING BOX WITH 0...10V MODULATING MOTOR

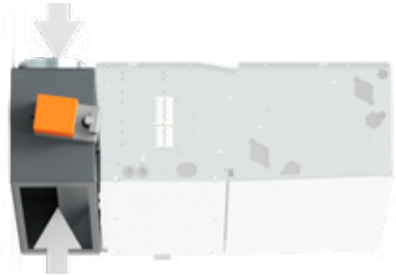

CODE	L Briza 22 / 26	# connections
8763 0301	550	1
8763 0302	750	2
8763 0303	950	2
8763 0304	1250	3
8763 0305	1550	4
8763 0306	1900	5

EXTERNAL GRILLE

CODE
8776 1750

BRIZA BUILT-IN CEILING ACCESSORIES

AIR INLET PLENUM 180°

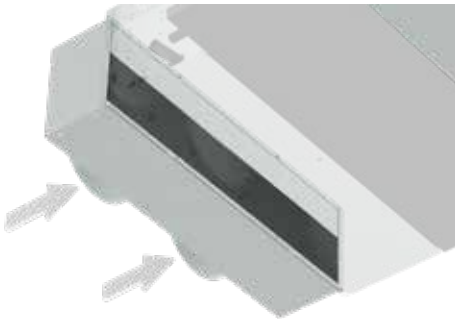

BRIZA 22 / 26 BUILT-IN CEILING

CODE	L Briza 22 / 26	# connections
8764 0501	055	2
8764 0502	075	2
8764 0503	095	3
8764 0504	125	4
8764 0505	155	5
8764 0506	190	7

AIR EXHAUST PLENUM 180°

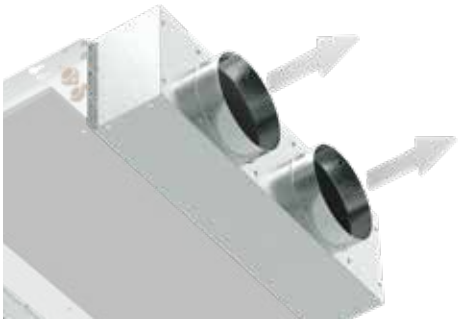

CODE	L Briza 22 / 26	# connections
8764 0601	055	2
8764 0602	075	2
8764 0603	095	3
8764 0604	125	4
8764 0605	155	5
8764 0606	190	7

ELECTRIC HEATING ELEMENT

The electric heating element can serve as backup heating to maintain the desired room temperature when, for example:

- the water temperature is too low (e.g., when using a heat pump in cold weather)
- or hot water is temporarily not available

CODE	OUTPUT	L Briza 22 / 26
8721 6282	750 W	075
8721 6283	750 W	095
8721 6284	750 W	125
8721 6285	750 W	155
8721 6286	750 W	190

CODE	OUTPUT	L Briza 22 / 26
8721 6292	1000 W	075
8721 6293	1000 W	095
8721 6294	1000 W	125
8721 6295	1000 W	155
8721 6296	1000 W	190

CODE	OUTPUT	L Briza 22 / 26
8721 6242	1250 W	075
8721 6243	1250 W	095
8721 6244	1250 W	125
8721 6245	1250 W	155
8721 6246	1250 W	190

See Technical Info chapter for detailed accessory specifications.

jaga

CLIMATE
DESIGNERS

HYDRONIC CONNECTION

BRIZA HYDRONIC CONNECTION - VALVES

SET 289

KVS 0.8 - default setting in 6 steps

CODE		BRIZA 10	BRIZA 12
CODY B18 24 4...	24 VDC	✓	-
CODY B18 23 4...	230 VAC	✓	-

fill in sleeve coupling code

SET 288

KV 1.65

CODE	BRIZA 10	BRIZA 12
CODY L01 00 4...	✓	-

fill in sleeve coupling code

SET 295

KVS 0.8

CODE		BRIZA 10	BRIZA 12
CODY SC5 24 4...	24 VDC	-	✓
CODY SC5 10 4...	0..10 VDC	-	✓

fill in sleeve coupling code

SET 290

CODE	BRIZA 10	BRIZA 12
CODY LOC 00 4...	-	✓

fill in sleeve coupling code

STAINLESS STEEL FLEXIBLE CONNECTIONS 1/2"

CODE	Length		BRIZA 10	BRIZA 12
7990 068	200 < 260 mm	2 units	✓	✓

SLEEVE COUPLINGS EUROCONE

Ordering example

Add the code of the connection set to the clamp couplings code. These depend on the type of pipe that was used and its Ø. Included in the price of the connections sets.

connection set code CODY B18 23 4 *sleeve coupling code* **620**

CODE	TUBE Ø
112	12/1
114	14/1
115	15/1
116	16/1
118	18/1

CODE	TUBE Ø
612	12/2
614	14/2
616	16/2
618	18/2

CODE	TUBE Ø
615	15/2.5
619	16/1.5
620	20/2

BRIZA HYDRONIC CONNECTION - VALVES

SET 301

SUPPLY VALVE Kv max. 3.4
LOCKSHIELD VALVE Kv max. 2.5

CODE		
CODY WA5 24 0	*without sleeve couplings*	24 VDC
CODY WA5 23 0	*without sleeve couplings*	230 VAC
CODY WA5 24 4...	*with sleeve couplings*	24 VDC
CODY WA5 23 4...	*with sleeve couplings*	230 VAC

fill in sleeve coupling code

SET 302

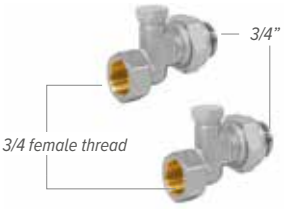

CODE	
CODY LO5 00 0	*without sleeve couplings*
CODY LO5 00 4...	*with sleeve couplings*

fill in sleeve coupling code

SET 98

Kv 1.5 without default setting

CODE		
CODY WA4 24 0	*without sleeve couplings*	24 VDC
CODY WA4 23 0	*without sleeve couplings*	230 VAC
CODY WA4 24 4...	*with sleeve couplings*	24 VDC
CODY WA4 23 4...	*with sleeve couplings*	230 VAC

fill in sleeve coupling code

SET 99

CODE	
CODY LOM 00 0	*without sleeve couplings*
CODY LOM 00 4...	*with sleeve couplings*

fill in sleeve coupling code

STAINLESS STEEL FLEXIBLE CONNECTIONS

CODE		Length	
8776 00010002	3/4"	300 < 600 mm	2 units
7990 068	1/2"	200 < 260 mm	2 units

large / small heat exchanger	BRIZA 22 / BRIZA 26	BRIZA 22 / BRIZA 26
2-pipe		
4-pipe		
	✓	-
	✓	-
	✓	-
	✓	-
	✓	-
	✓	-
	-	✓
	-	✓
	-	✓
	-	✓
	-	✓
	-	✓
	✓	-
	-	✓

SLEEVE COUPLINGS EUROCONE

Ordering example
Add the code of the connection set to the clamp couplings code. These depend on the type of pipe that was used and its Ø. Included in the price of the connections sets.

connection set code CODY WA 24 4 *sleeve coupling code* **620**

CODE	TUBE Ø
112	12/1
114	14/1
115	15/1
116	16/1
118	18/1

CODE	TUBE Ø
612	12/2
614	14/2
616	16/2
618	18/2

CODE	TUBE Ø
615	15/2.5
619	16/1.5
620	20/2

BRIZA HYDRONIC PRESSURE DROPS

2-PIPE - STANDARD KV

PRE-SETTING	1	2	3	4	5	6	KVS
KV	0.10	0.20	0.30	0.40	0.50	0.60	0.80
2-PIPE	✓	✓	✓	✓	✓	✓	-

JAGA VALVE
3/4" EUROCONE
5090.4407

Set: 295

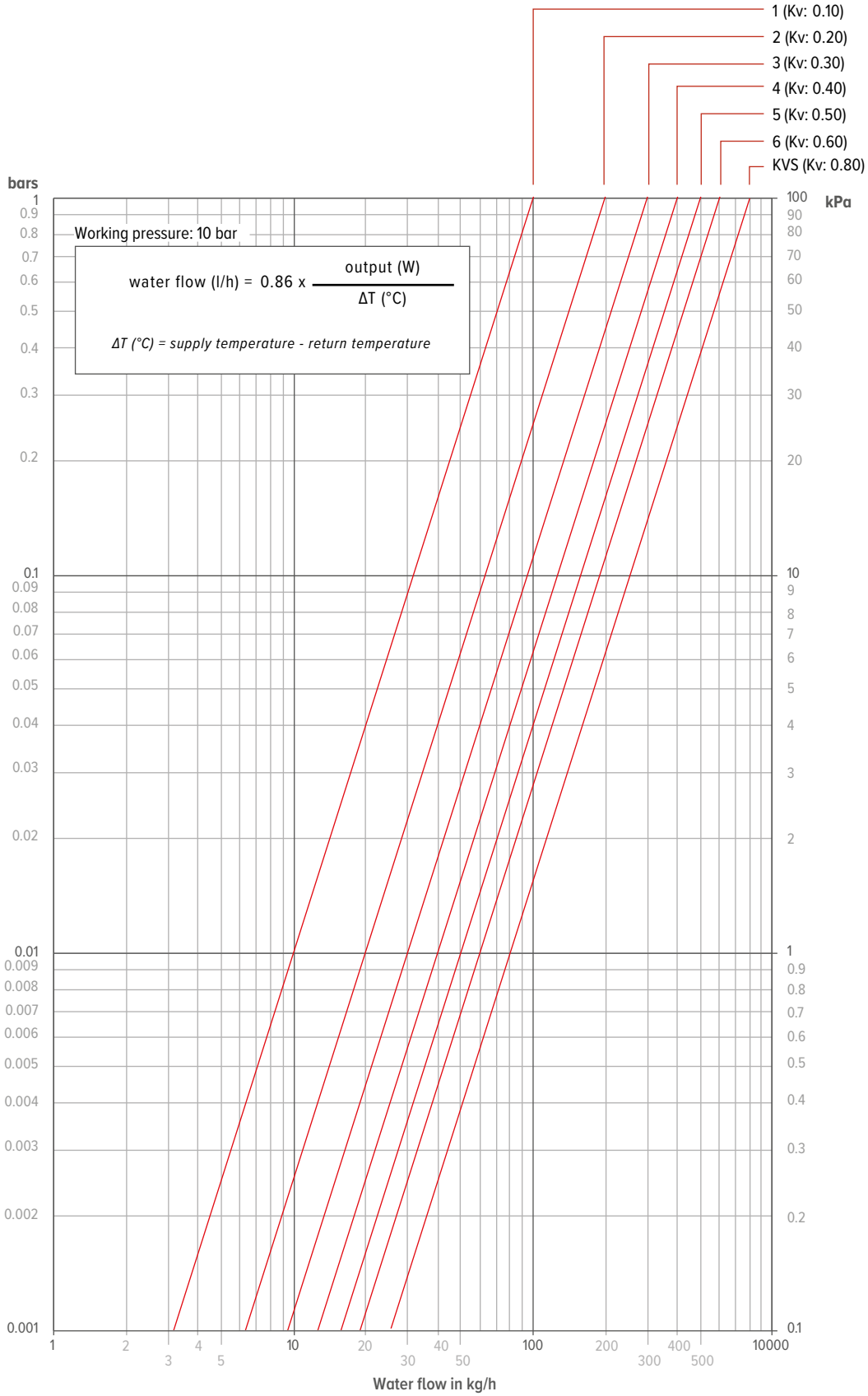

BRIZA HYDRONIC PRESSURE DROPS

PRE-SETTING	1	2	3	4	5	6	7	8	9
NUMBER OF ROTATIONS	1.25	1.50	1.75	2.00	2.50	3.00	3.50	4.00	open
KV	0.14	0.20	0.31	0.43	0.60	0.79	1.00	1.20	1.35

JAGA RETURN VALVES 3/4"
EUROCONE STRAIGHT
5094 4431

Set: 290, 295

JAGA LOCKSHIELD VALVES 1/2"
FEMALE THREAD STRAIGHT
5090 109

Set: 98, 99

JAGA LOCKSHIELD VALVES 1/2"
FEMALE THREAD ANGLED
5090 110

Set: 289, 288

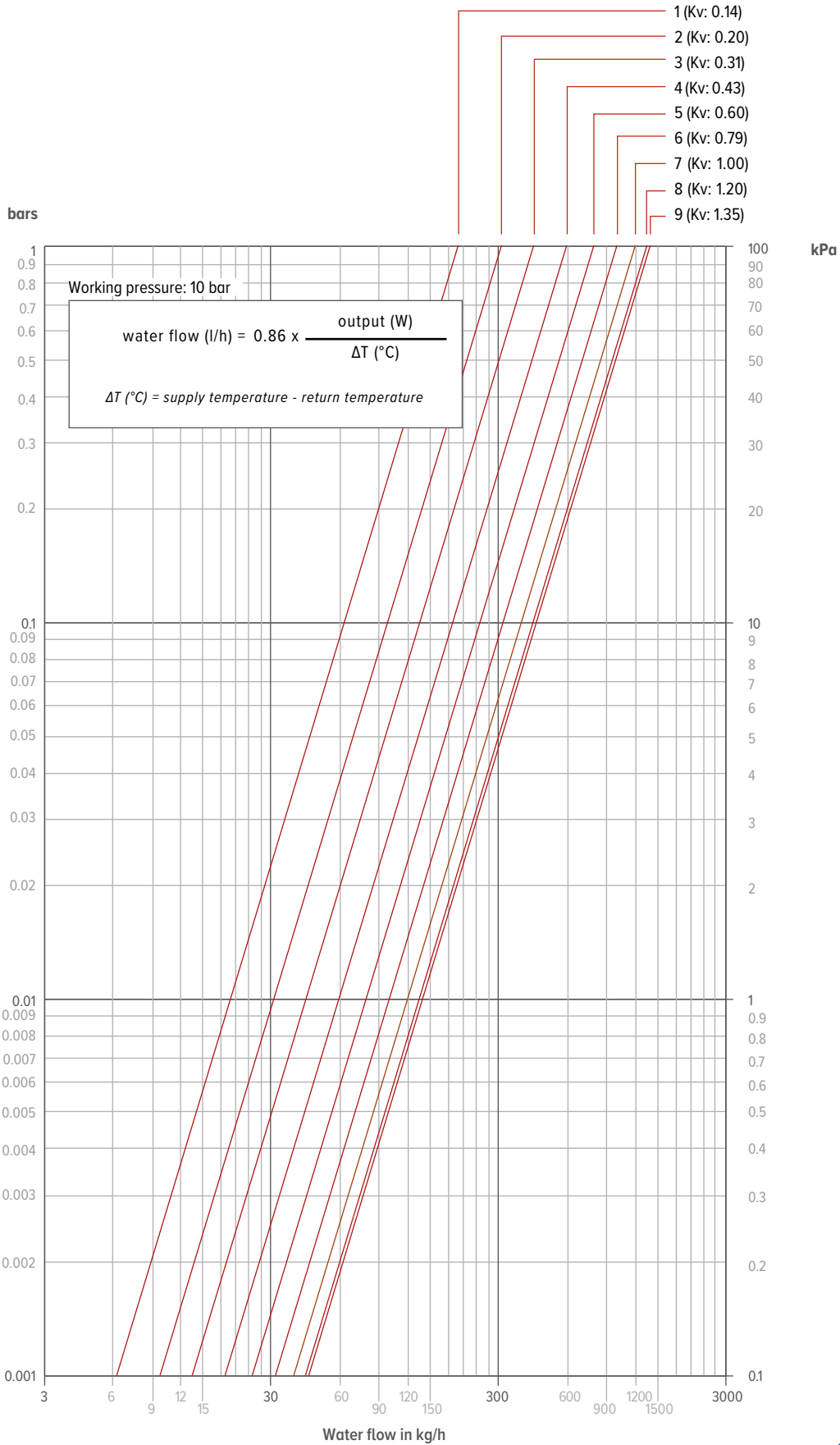

BRIZA HYDRONIC PRESSURE DROPS

KV	3.4

JAGA VALVE 3/4" MALE THREAD DN 20 ANGLED FOR 3/4" FEMALE THREAD CONNECTION

5090 701

Set 301

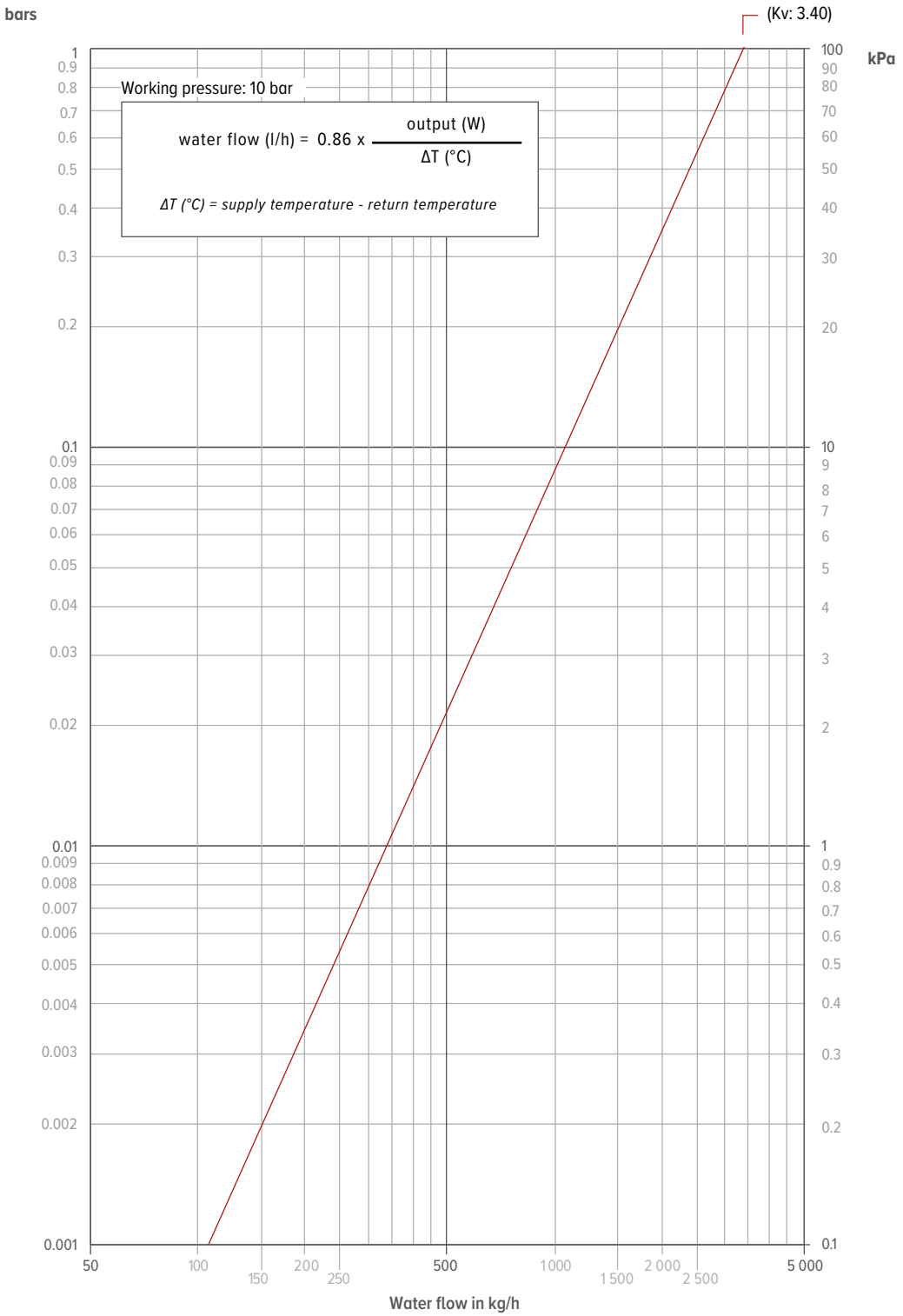

BRIZA HYDRONIC PRESSURE DROPS

NUMBER OF ROTATIONS	2	3	4	open
KV	0.8	1.5	2.1	2.5

JAGA RETURN VALVE 3/4" MALE THREAD DN 20 STRAIGHT FOR 3/4" FEMALE THREAD CONNECTION

5090 702

Set 301, 302

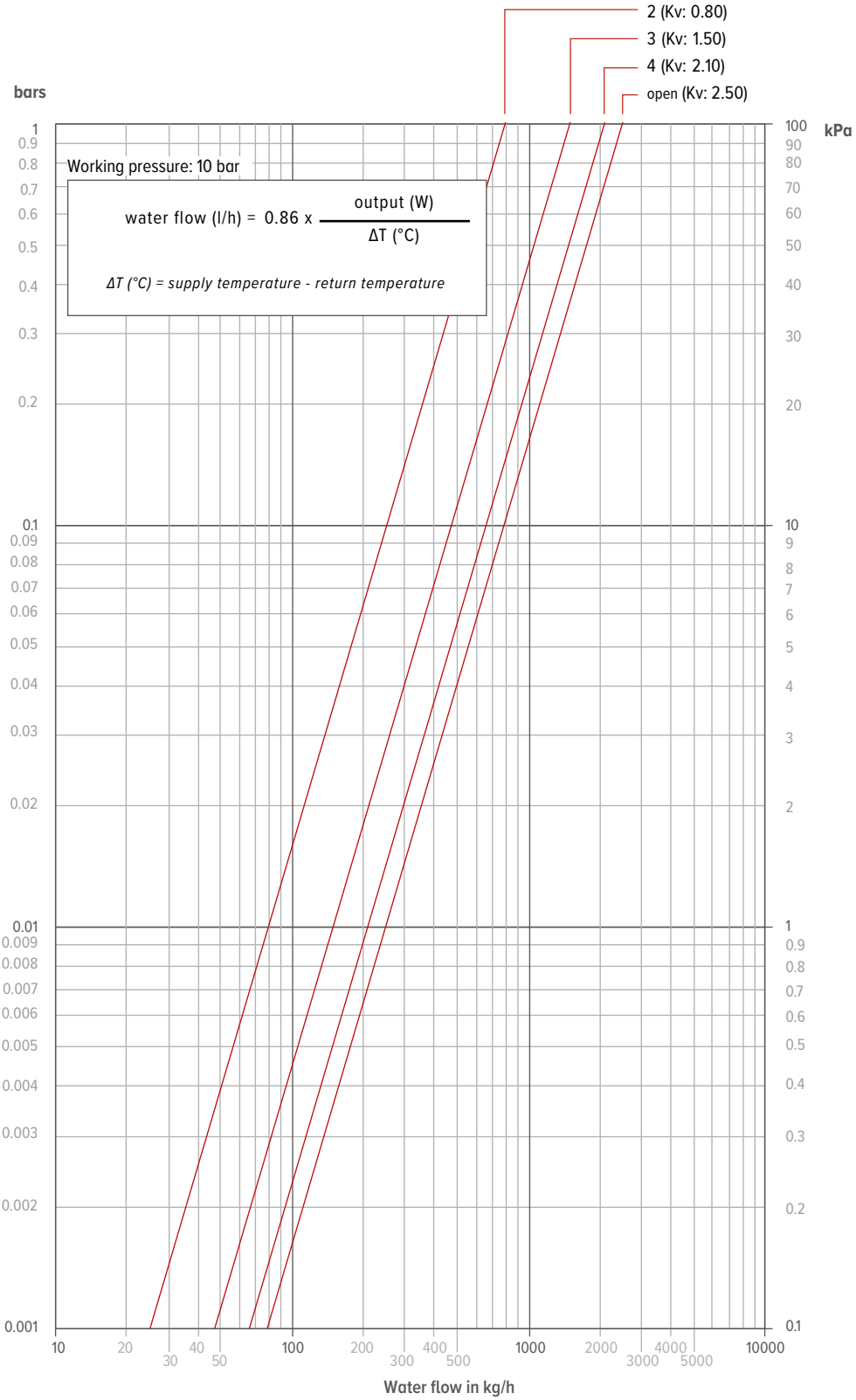

BRIZA CONDENSATE PUMP

DESCRIPTION

Whisper-quiet:	ideal for installation in any room
IP64 protection:	optimally protected against dust and splashing water
Plug & Play connectors:	fast and easy installation and maintenance
Transparent reservoir:	instant view of the status for easy maintenance
Brass outlet:	guaranteed strength and reliability
Patented foam casing:	less noise and easier to install

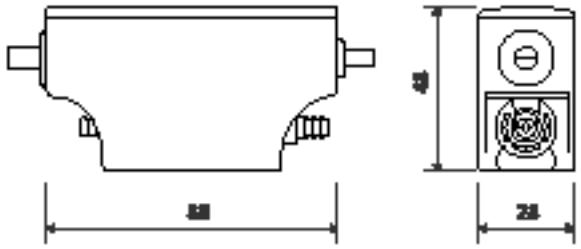

FLOW RATE

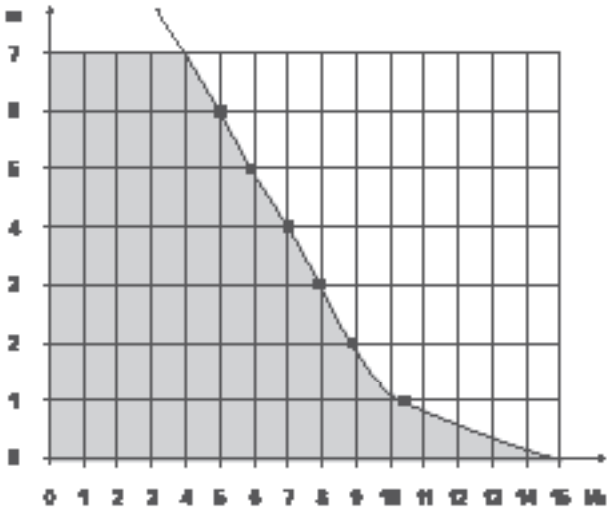

STANDARD DELIVERY

- Pump
- Reservoir with venting hose
- Power/alarm cable
- Pump base
- Reservoir base
- Double-sided tape
- Inlet hose
- Suction hose (1.8 m)
- 1 clamp

SPECIFICATIONS

Maximum flow rate (l/h)	15
Maximum suction height (m)	2
Maximum discharge head (m)	10
Electrical power (W)	19
Rated voltage (VAC)	220 / 240
Frequency (Hz)	50 / 60
Alarm	NO-NC 5A
Sound level (dB(A))	19.7
Protection category	IP64
Thermal protection	✓
Work cycle (%)	100
Length of the power/alarm cable (m)	1.6

If need be, the pump can run 100% of the time.

GUIDELINES FOR USING THE MINI FLOWATCH 2 SILENCE CONDENSATE PUMP:

For correct operation, it is essential to follow the installation manual precisely. Incorrect installation or failure to adhere to the instructions may cause serious water damage.

IMPORTANT FOR INSTALLATION AND USE

- Always read and follow the supplied instructions.
- Mount the float module perfectly horizontally and use the supplied tape for a stable attachment.
- Always connect the vent of the float module above the water level of the drip tray.
- Always use the correct crystal tube diameter (Ø 6 mm internal / Ø 9 mm external) – never larger.
- Respect the maximum suction height and discharge head in relation to the unit's condensate production.
- Allow for sufficient ventilation around the pump.
- The pump should never be installed outside or in frost-sensitive rooms.
- The condensate pipe cannot be pinched or bent; use a guide or a plastic 90° elbow if necessary.
- Always use all the supplied accessories and fastening straps to prevent the hose from detaching.
- Provide a separate power supply (independent of the cooling unit) to ensure the pump is always active.
- The pump is protected against water ingress (IP64).

MAINTENANCE AND SAFETY

- Check the float module at least twice a year for contamination or blockages. In dirty environments, this inspection should occur more frequently.
- Include cleaning the pre-filter at every inspection.
- Do not use aggressive cleaning agents, as these could damage the pump. Only approved products with safety datasheets are allowed.
- The pump is equipped with an alarm contact; make sure this is ALWAYS connected so that the condensing unit is immediately shut down in case of blockages.

LIABILITY

JAGA NV cannot be held liable for damages resulting from incorrect installation, insufficient maintenance, or failure to comply with these guidelines.

CE

BRIZA BUILT-IN CEILING

	BRIZA 12	BRIZA 22	BRIZA 26

CONDENSATE LEVEL SENSOR

sensor for monitoring the condensate level in the condensate collector

- Normally closed (NC)
- Max. contact load 10 W
- Max. contact voltage 100 VDC
- Max. switching current 0.5 A

	✓	✓	✓

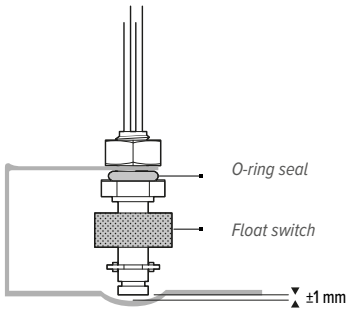

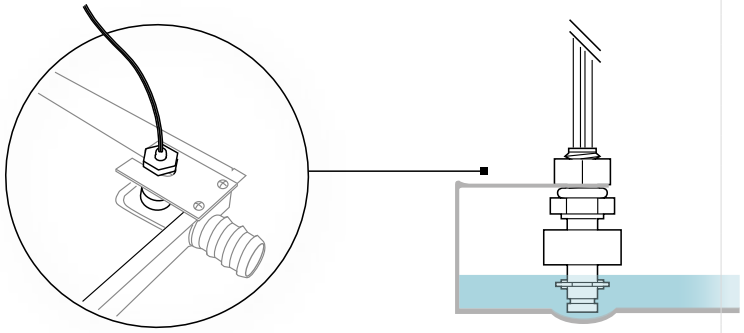

E316052

MOUNTING BRACKET FOR LEVEL SENSOR

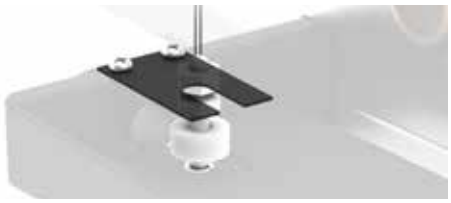

bracket for mounting the level sensor in the condensate tray

- The mounting holes are pre-punched in the condensate tray.
- LACQUERED
- Thickness: 1 mm
- Two rivets for mounting are supplied as standard.

	-	✓	✓

CONDENSATE TRAY WITH OUTLET SPIGGOT Ø 2 CM

	✓	-	-

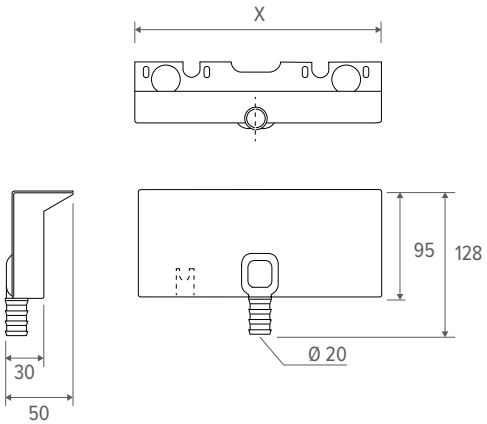

CODE	for Briza 12 Built-in ceiling	X
5127 000 100 01	H 038	215
5127 000 100 02	H 052	295
	for Briza 12 Ceiling mounted model	
8546 038 001	H 041/042 left	215
8546 038 002	H 041/042 right	215
8546 052 001	H 055/056 left	295
8546 052 002	H 055/056 right	295

CE

jaga

CLIMATE
DESIGNERS

ELECTRICAL CONNECTION

BRIZA ELECTRICAL CONNECTION

POWER SUPPLIES

⚠ ***Jaga units are only CE: EN-60335 certified with use of the original Jaga power supplies***

SUPPLY VOLTAGE NO JAGA JDPC CONTROL SYSTEM	Briza 10	Briza 12	Briza 22	Briza 26
24 VDC	✓	✓	-	-
230 VAC	-	-	✓	✓
JAGA JDPC CONTROLS				
24 VDC	✓	✓	✓	✓
230 VAC	-	-	✓	✓

WATERPROOF POWER SUPPLY 24 VDC WITH WATERPROOF CABLE GLAND

- in compliance with UL1310 - EN 60950-1 / Class II
- output voltage 24 VDC
- input voltage 100 - 240 VAC
- output current 1.67 A
- output 40 Watts
- dimensions L 14.5 x W 4.5 x H 3.0 cm

CODE		BRIZA 10 / 12	BRIZA 22 / 26
37603 010002		✓	-
P *(add* **"P"** *to the order code)*	Pre-mountend	✓	-

POWER SUPPLY DIN-RAIL ASSEMBLY

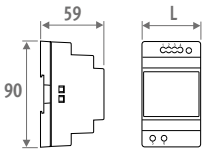

- for DIN-rail or wall mounting in a electrical switchboard
- in compliance with UL60950 / UL508 / EN 60950-1 / TUV EN61558-2-16 / Class II
- output voltage 24 VDC
- input voltage 100 - 240 VAC
- screw connection
- LED indicator

CODE	L *mm*	OUTPUT *Watts*	OUTPUT CURRENT *A*	BRIZA 10 / 12	BRIZA 22 / 26
7990 054	3.5	36	1.50	✓	-
7990 055	5.3	60	2.50	✓	-
7990 056	7.0	92	3.90	✓	-
7990 057	10.3	150	6.25	✓	-

24 VDC POWER SUPPLY

- Power supply for the JDPC, thermostat and thermoelectric motorr
- in compliance with UL1310 - EN 60950-1 / Class II
- output voltage 24 VDC
- input voltage 90 - 264 VAC
- output current 0.34 A
- output 8.16 Watts
- dimensions L 6.0 x W 3.0 x H 2.35 cm

CODE	BRIZA 10 / 12	BRIZA 22 / 26
8776 050100	-	✓

BRIZA ELECTRICAL CONNECTION

WHICH JAGA JDPC CONTROL DO YOU NEED?

Would you like the unit to have room temperature control?

Yes, unit with integrated room temperature control
Fans will start automatically when the internal control sends warm/cold water through the radiator

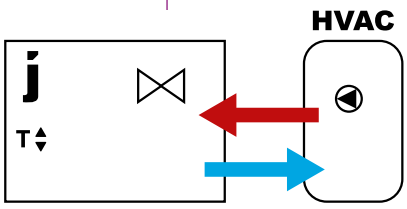

Plug & Play

Unit included
- valve set
- power supply
- integrated temperature regulation (TPT, App (JIC), Smart BMS or JRT 100 TB)

(Order sleeve couplings 3/4" Eurocone separate)

0-10V signal for fan control available from
- (Jaga) room thermostat with 0-10V signal to unit
- home automation with 0-10V signal to unit

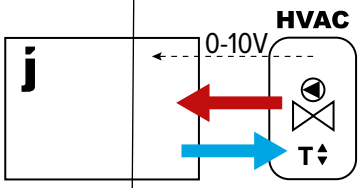

Wall-mounted model
Installation in a wall recess
Built-in ceiling
Ceiling mounted model

Fan speed is controlled by 0-10V connection to electronics outside the radiator

NO CONTROL SYSTEM

/

/

Briza

Ordered optionally:
- valve set: Briza 10: set 289 or set 288
  Briza 12: set 295 or set 290
  Briza 22 / 26: set 301, 302, 98 or 99
- stainless steel flexible connections (in pairs)
- power supply: waterproof power supply or DIN-rail power supply
- thermostat (0-10V) outside the unit

Wall-mounted model
Installation in a wall recess
Built-in ceiling
Ceiling mounted model

Fan speed is controlled by 0-10V connection to the electronics in the radiator

JAGA JDPC BMS

0-10V

Coding 2-pipe: D03

Coding 4-pipe: D04

Unit including selected control system

Ordered optionally:
- valve set: Briza 10: set 289 or set 288
  Briza 12: set 295 or set 290
  Briza 22 / 26: set 301, 302, 98 or 99
- stainless steel flexible connections (in pairs)
- power supply: waterproof power supply or DIN-rail power supply
- thermostat (0-10V) outside the unit

No, unit without integrated room temperature control
Fans will start automatically when the external control sends warm/ cold water through the radiator

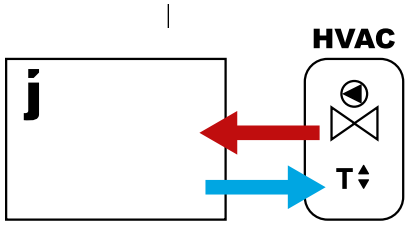

Without 0-10V signal:
- room thermostat (None-Jaga)
- area control with room temperature control
- boiler or heat pump control with room temperature control
- home automation with room temperature control
- other external room temperature controls

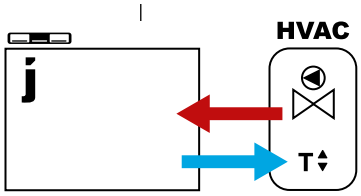

Installation in a wall recess
Built-in ceiling
Ceiling mounted model

The fan operates at a fixed speed

JAGA JDPC ON / OFF

D07

D08

Wall-mounted model

Choose from 3 fixed fan speeds (non-adaptive to room temperature)

JAGA JDPC ACO

D09

D10

Unit including selected control system

Ordered optionally:
- valve set: Briza 10: set 289 or set 288
  Briza 12: set 295 or set 290
  Briza 22 / 26: set 301, 302, 98 or 99
- stainless steel flexible connections (in pairs)
- power supply: waterproof power supply or DIN-rail power supply
- thermostat (0-10V) outside the unit

BRIZA JAGA JDPC CONTROLS

CONTROL		POSITION	D03 - JAGA JDPC BMS - 2-PIPE	D04 - JAGA JDPC BMS - 4-PIPE	D07 - JAGA JDPC ON / OFF- 2-PIPE	D08 - JAGA JDPC ON / OFF - 4-PIPE	D09 - JAGA JDPC ACO- 2-PIPE	D10 - JAGA JDPC ACO - 4-PIPE	D01 - JAGA JDPC TPT - 2-PIPE	D02 - JAGA JDPC TPT - 4-PIPE	D11 - JAGA JDPC TW - 2-PIPE	D12 - JAGA JDPC TW - 4-PIPE	D21 - JAGA JDPC SMART BMS - 2-PIPE*	D22 - JAGA JDPC SMART BMS - 4-PIPE*	D25 - JAGA JDPC SMART BMS C - 2-PIPE	D26 - AGA JDPC SMART BMS C - 4-PIPE
AIR TEMPERATURE SENSOR			-	-	-	-	✓	✓	✓	✓	-	-	-	-	-	-
WATER TEMPERATURE SENSOR			1	2	1	2	1	2	1	2	1	2	1	2	1	2
EXTERNAL 0-10 V CONTROL			✓	✓	-	-	-	-	-	-	✓	✓	✓	✓	✓	✓
EXTERNAL THERMOSTAT			-	-	-	-	-	-	-	-	-	-	✓	✓	✓	✓
BUILT-IN THERMOSTAT			-	-	-	-	-	-	-	-	✓	✓	-	-	-	-
CONTROL PANEL			-	-	-	-	✓	✓	✓	✓	-	-	-	-	-	-
PRE-ASSEMBLED CONDENSATE PUMP			-	-	-	-	-	-	-	-	-	-	-	-	✓	✓
PRE-MOUNTED POWER SUPPLY			-	-	-	-	-	-	✓	✓	✓	✓	✓	✓	✓	✓
PREASSEMBLED VALVES			-	-	-	-	-	-	✓	✓	✓	✓	✓	✓	✓	✓
FREESTANDING	BRIZA 22		✓	✓	-	-	-	-	✓	✓	-	-	✓	✓	✓	✓
CEILING MOUNTED MODEL	BRIZA 22		✓	✓	✓	✓	-	-	-	-	-	-	✓	✓[2]	✓	✓[2]
	BRIZA 12		✓	✓[2]	✓	✓[2]	-	-	-	-	-	-	✓	✓[2]	✓	✓[2]
	BRIZA 10		✓	-	✓	-	-	-	-	-	-	-	✓	-	✓	-
BUILT-IN CEILING	BRIZA 26		✓	✓	✓	✓	-	-	-	-	-	-	✓	✓	✓	✓
	BRIZA 22		✓	✓	✓	✓	-	-	-	-	-	-	✓	✓	✓	✓
	BRIZA 12		✓	✓	✓	✓	-	-	-	-	-	-	✓	✓	✓	✓
WALL-MOUNTED MODEL	BRIZA 22		✓	✓[2]	-	-	✓	✓[2]	✓	✓[2]	✓[2]	✓[2]	✓	✓[2]	-	-
	BRIZA 12		✓	✓[2]	-	-	✓	✓[2]	✓	✓[2]	✓[1]	✓[1]	✓	✓[2]	-	-
	BRIZA 10		✓	-	-	-	✓	-	✓	-	-	-	✓	-	-	-
INSTALLATION IN A WALL RECESS	BRIZA 26		✓	✓	✓	✓	-	-	-	-	-	-	✓	✓	-	-
	BRIZA 22		✓	✓	✓	✓	-	-	-	-	-	-	✓	✓	-	-
	BRIZA 12		✓	✓	✓	✓	-	-	-	-	-	-	✓	✓	-	-

** D21 Jaga JDPC Smart BMS: no condensing cooling with ceiling-mounted and recessed ceiling models*

[1] Available only in the version: Baseline, Coreline

[2] Available only in the version: Coreline

BRIZA THERMOSTATS

	JRT-100 TB BLACK	JRT-100 TW WHITE	JRT-200 W	RDG 260T	RDG264KN
	8751 050019	8751 050017	8751 050021	8751 050020	8751 050018

	JRT-100 TB	JRT-100 TW	JRT-200 W	RDG 260T	RDG264KN
POWER SUPPLY					
supply voltage	24V DC	24V DC	24V DC	24V DC	24V DC
OUTPUT / INPUT VOLTAGE					
valve 24V DC contact	2 (NO)	2 (NO)	2	-	-
potential-free contact	-	-	-	3 (NO)	3 (NO)
input from keycard	-	-	-	✓	✓
input from window contact	-	-	-	✓	✓
fan (0 - 10 V DC)	max. +/- 10 mA	max. +/- 10 mA	max. +/- 10 mA	max. +/- 5 mA	max. +/- 5 mA
manual 3-position speed controller	✓	✓	✓	✓	✓
automatic mode	✓	✓	✓	✓	✓
APPLICATIONS					
2-pipe					
manual (H/C)	✓	✓	✓	✓	✓
auto (H/C) - temperature monitoring of heat exchanger water requires JDPC	optional	optional	optional	optional	optional
4-pipe					
manual (H/C)	✓	✓	✓	✓	✓
auto (H/C)	✓	✓	✓	✓	✓
DIMENSIONS					
for wall-mounting	-	-	✓	✓	✓
for recessed-mounting	✓	✓	optional	optional	optional
	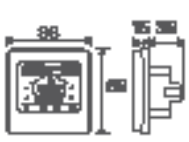	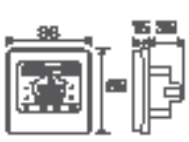	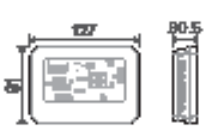	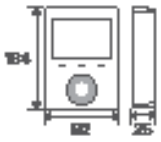	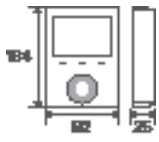
POSITION					
LCD display with backlight	-	-	✓	✓	✓
LCD touch screen with backlight	✓	✓	-	-	-
protection category IP20	-	-	✓	-	-
protection category IP30	✓	✓	-	✓	✓
integrated CO2-sensor	-	-	-	-	✓
humidity sensor	-	-	-	-	✓
FEATURES					
programmable time zones	✓	✓	✓	✓	✓
control via Wi-Fi (smartphone app)	✓	✓	✓	-	-
fan start delay	-	-	-	✓	✓
continuous fan speed	✓	✓	✓	✓	✓
temperature sensor 80 cm	✓	✓	✓	-	-

BRIZA SAMPLE WIRE DIAGRAMS ELECTRICAL INSTALLATION

Jaga aims to simplify your installation process with these sample diagrams. Perfectly align your power supply, thermostatic valve mounting, control system, pipe system, temperature monitoring and number of units per area.

Here, you can find the most common combinations. Feel free to ask for more variations at info@jaga.com

1. HYDRONIC

Option 1: 2-pipe system

Option 2: 4-pipe system

2. CONTROL

Option 1: controls inside the unit

Option 2: controls outside the unit

3. CHOICE OF THERMOSTAT

Option 1: thermostat JRT-100 TW or TB (wifi)

Option 2: thermostat JRT-200 W

Option 3: thermostat RDG 260T

Option 4: control panel

Option 5: based on water temperature

Option 6: home automation / building management system

4. CONTROL

Option 1: BMS

Option 2: ACO

Option 3: TPT

Option 4: on / off

Option 5: 3-speed control

Option 6: no control system

5. POWER SUPPLY

Option 1: component power (inside the unit)

Option 2: power supply DIN-rail assembly (outside the unit)

Option 3: no power supply

Option 4: power adapter for mains socket

6. THERMOELECTRIC ACTUATOR

Option 1: no thermoelectric motor

Option 2: thermostatic valve inside the unit (24 V)

Option 3: thermostatic valve inside the unit (230 V)

Option 4: thermostatic valve outside the unit (24 V)

Option 5: thermostatic valve outside the unit (230 V)

Option 6: thermostatic valve inside the unit (24 V) - 0 ... 10 V control

6. EXTERNAL SIGNAL

Option 1: external signal

Option 2: no external signal

BRIZA 10 SAMPLE DIAGRAM 1

- 2-pipe
- controls outside the unit
- thermostat JRT-100 TW or TB (wifi)
- no control system
- component power (inside the unit)
- thermostatic valve inside the unit (24V)
- no external signal

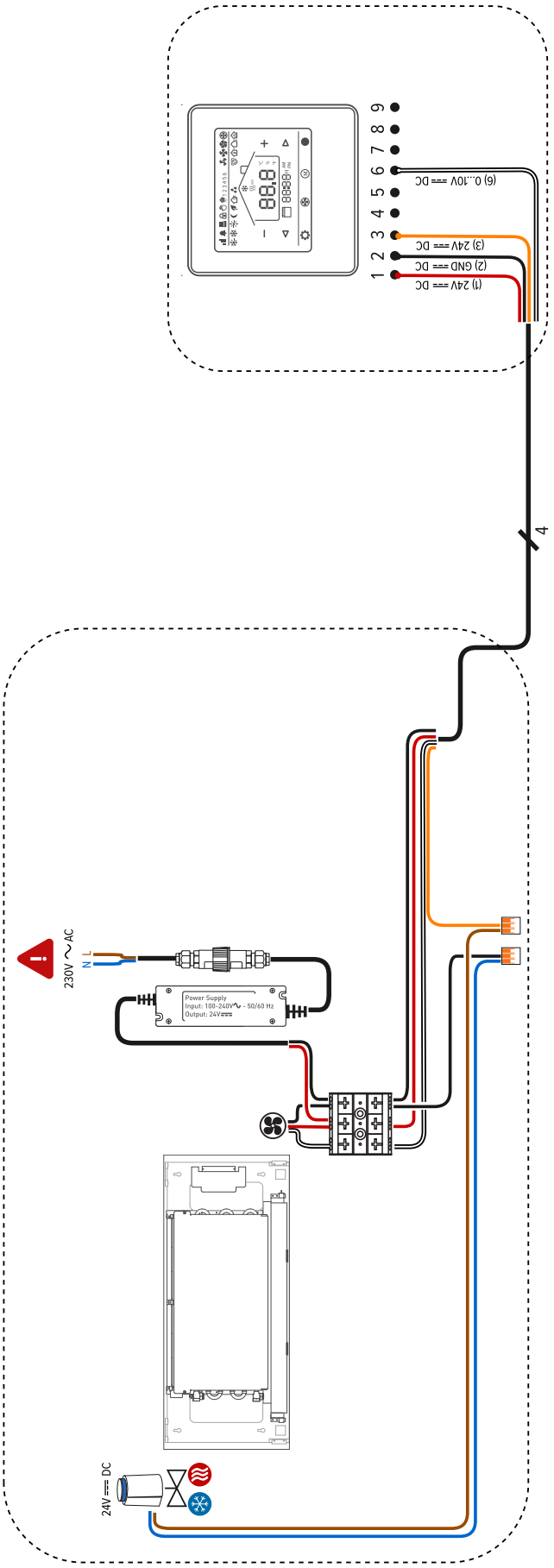

BRIZA 10 SAMPLE DIAGRAM 2

- 2-pipe
- controls outside the unit
- thermostat JRT-200 W
- no control system
- power supply DIN-rail assembly (outside the unit)
- thermostatic valve outside the unitl (24 V)
- no external signal

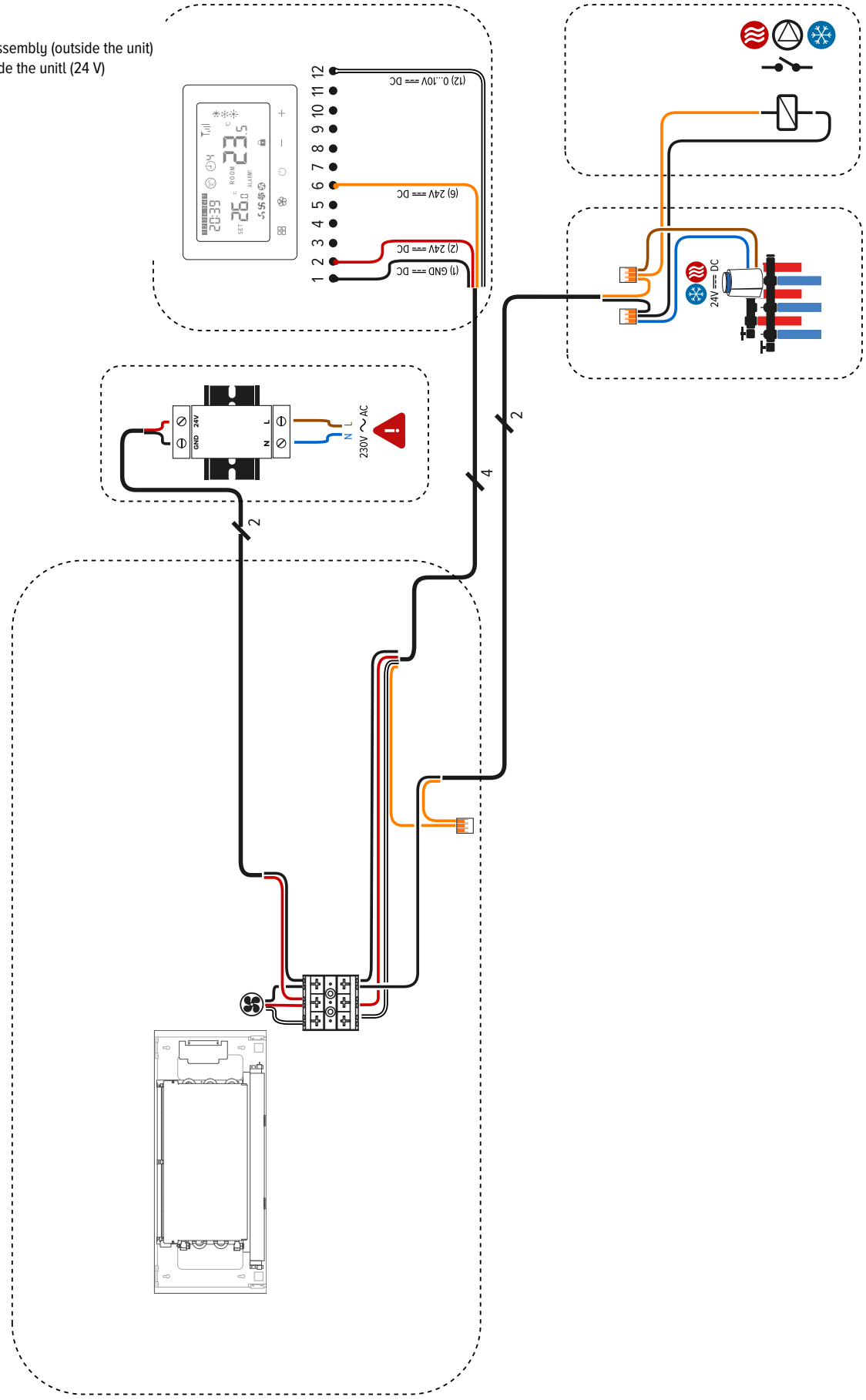

BRIZA 10 SAMPLE DIAGRAM 3

- 2-pipe
- controls outside the unit
- home automation / building management system
- BMS
- component power (inside the unit)
- thermostatic valve inside the unit (24V)
- no external signal

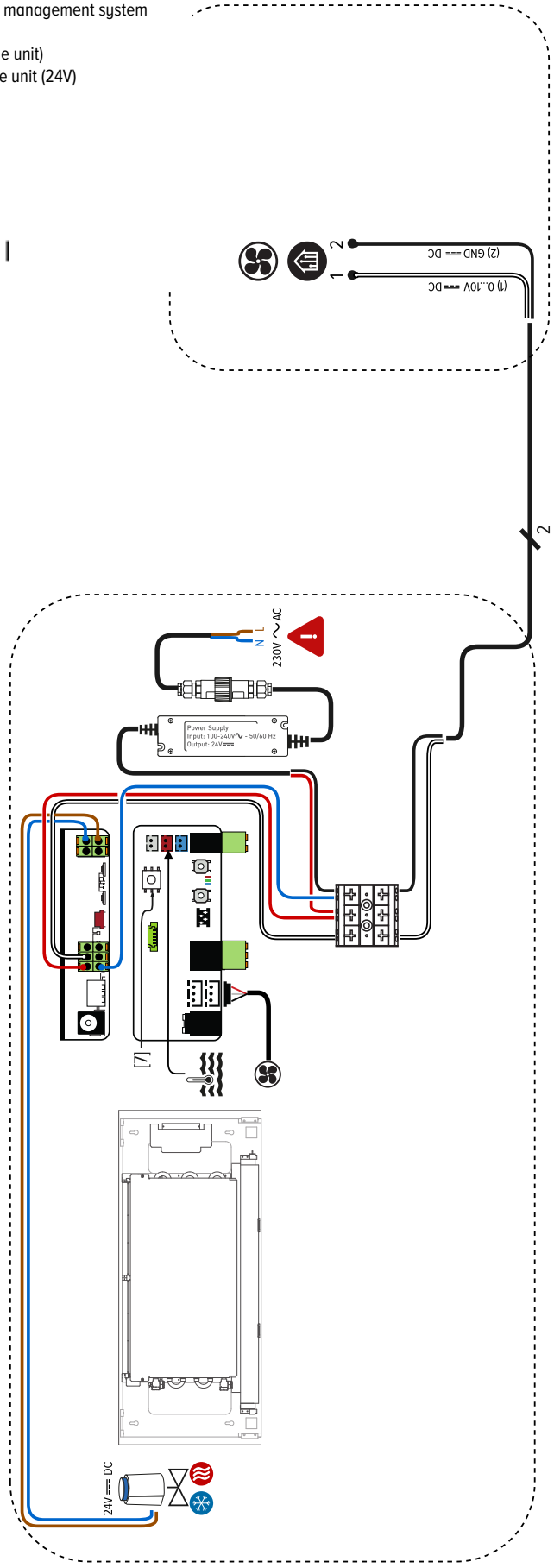

BRIZA 10 SAMPLE DIAGRAM 4

- 2-pipe
- controls inside the unit
- control panel
- TPT
- component power (inside the unit)
- thermostatic valve outside the unitl (24 V)
- external signal

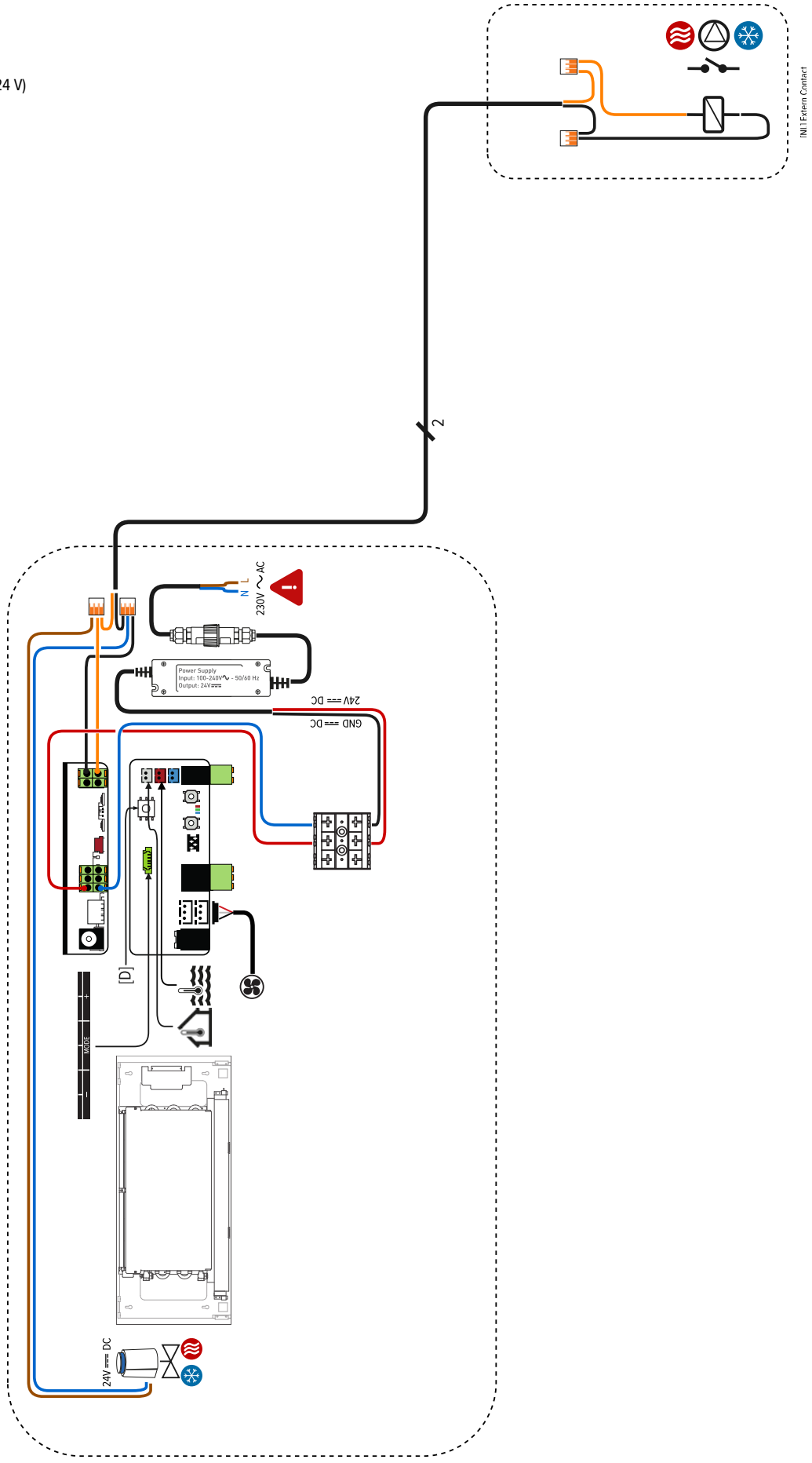

BRIZA 12 SAMPLE DIAGRAM 2

- 2-pipe system
- controls outside the unit
- thermostat JRT-100 TW or TB (wifi)
- BMS
- component power (inside the unit)
- thermostatic valve inside the unit (24 V)
- external signal

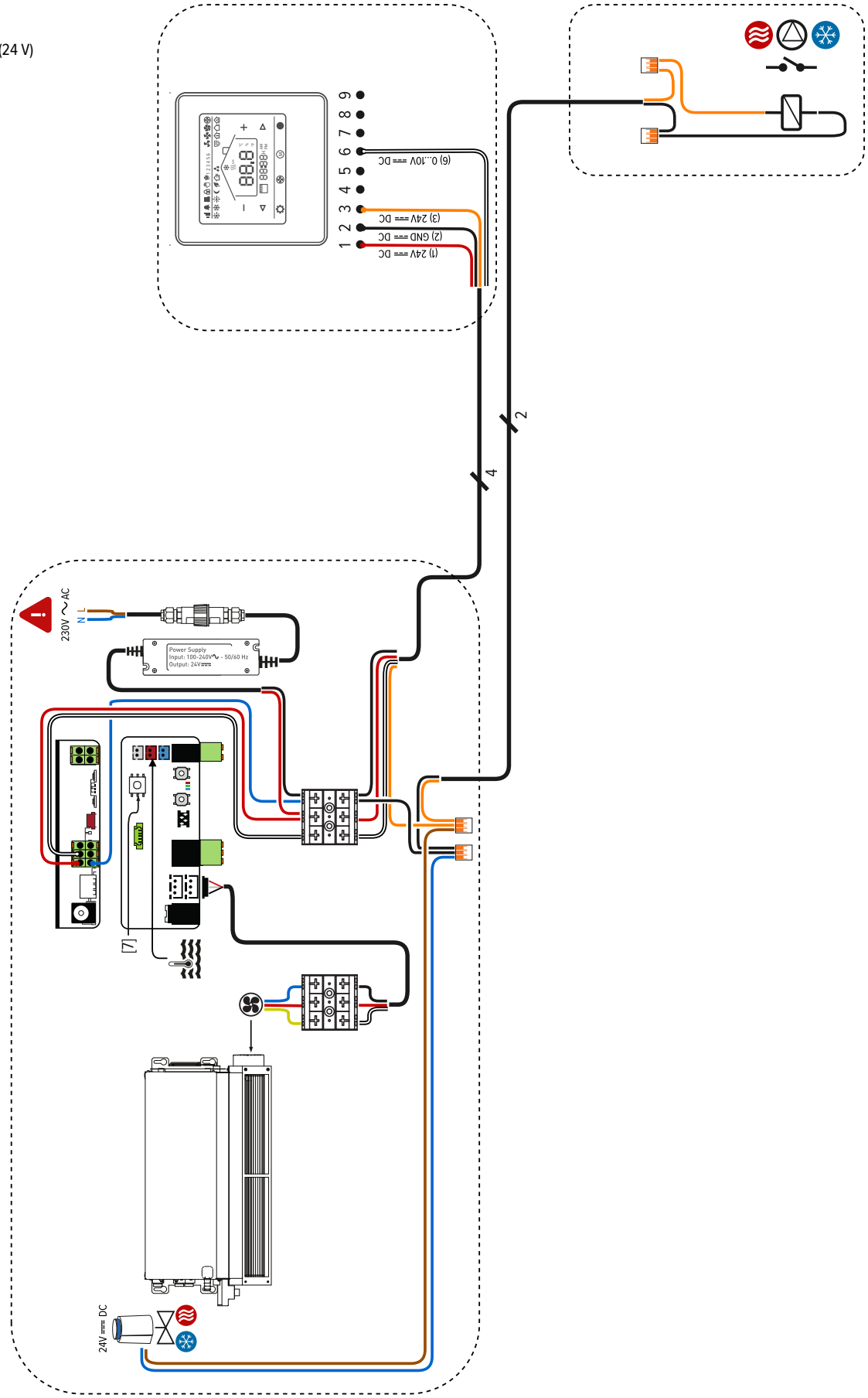

BRIZA 12 SAMPLE DIAGRAM 2

- 2-pipe system
- controls outside the unit
- thermostat JRT-200
- BMS
- power supply DIN-rail assembly (outside the unit)
- thermostatic valve outside the unit (24 V)
- external signal

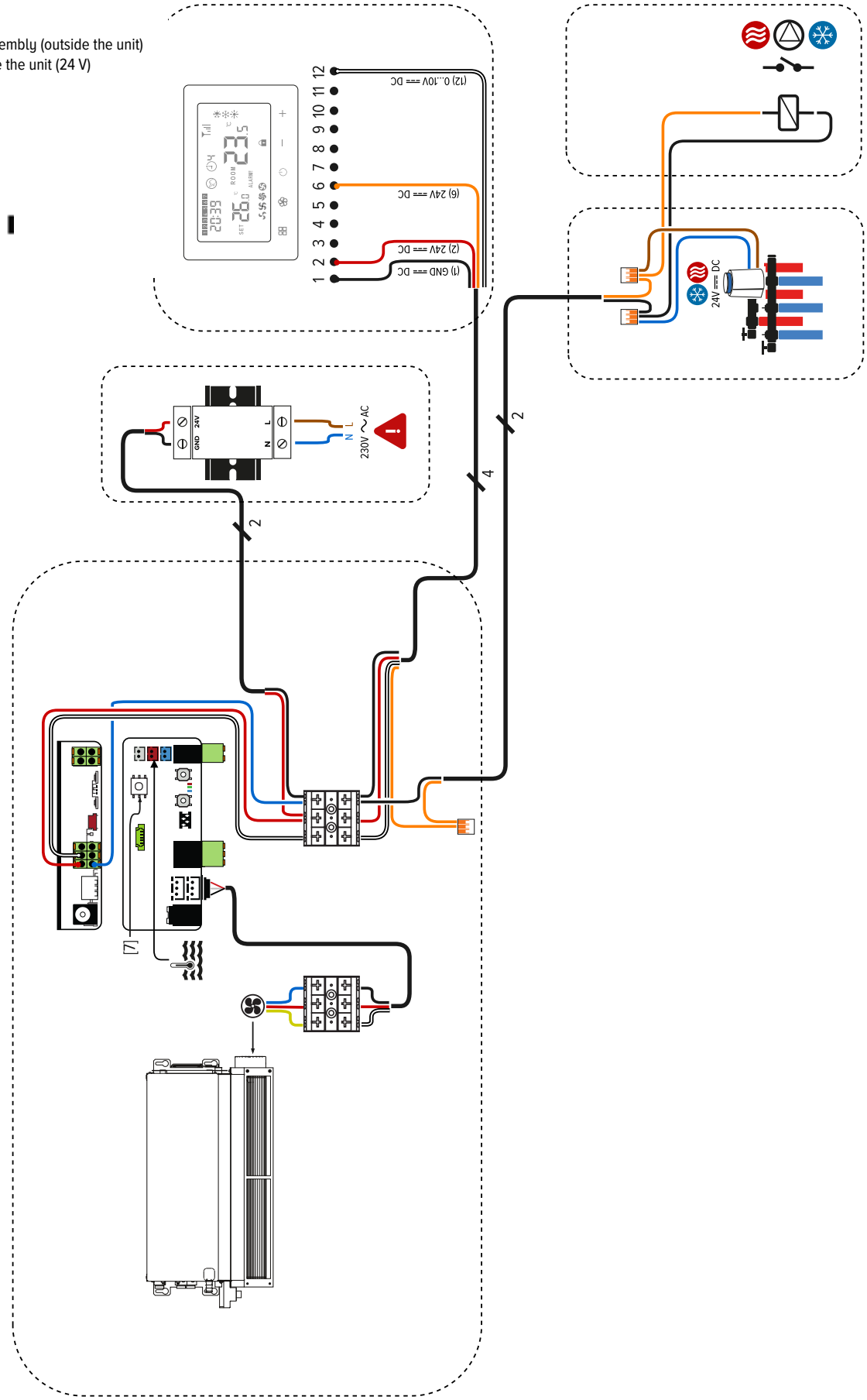

BRIZA 12 SAMPLE DIAGRAM 3

- 2-pipe system
- controls outside the unit
- home automation / building management system
- BMS
- component power (inside the unit)
- thermostatic valve outside the unit (24 V)
- no external signal

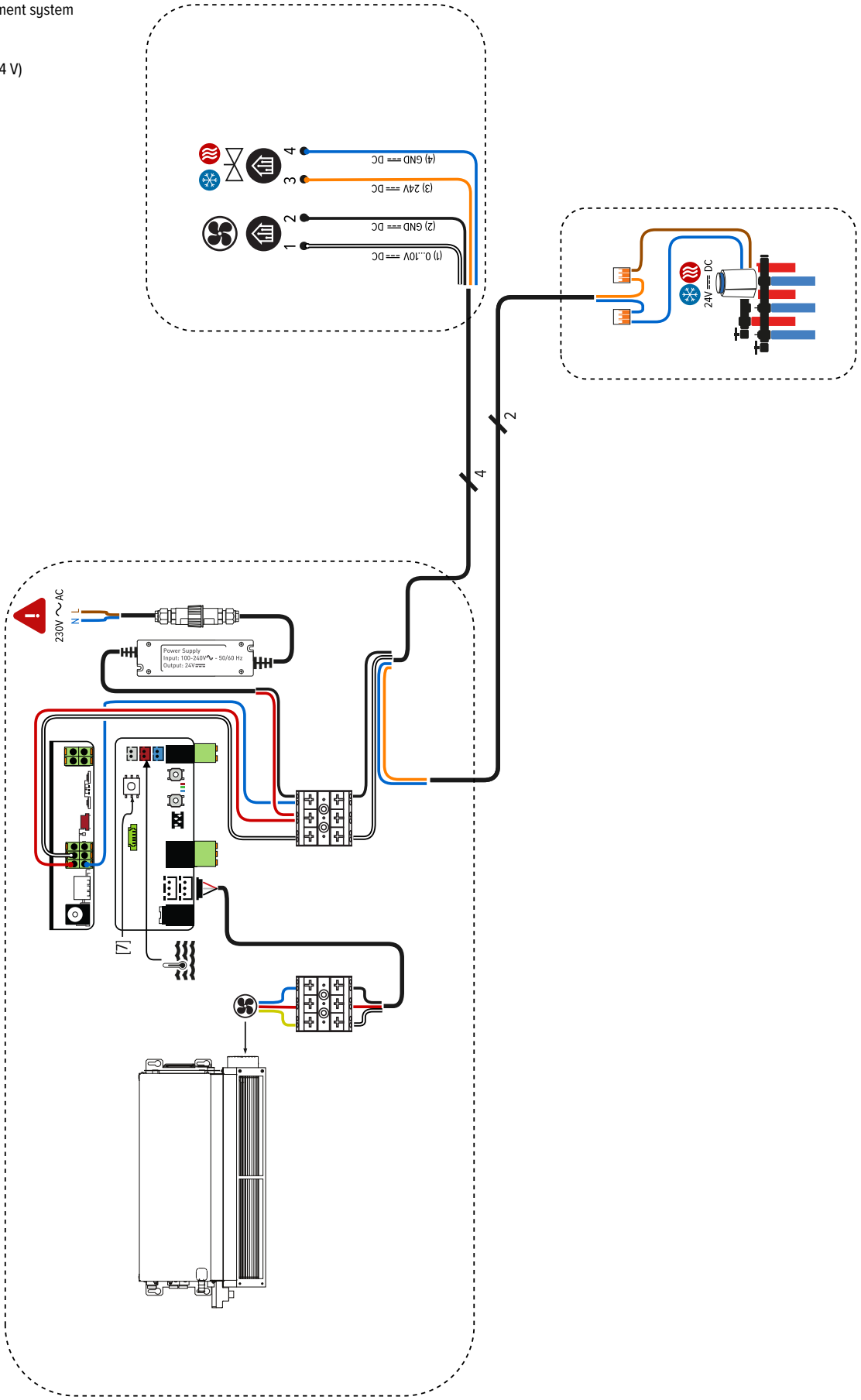

BRIZA 22 / 26 SAMPLE DIAGRAM 1

- 4-pipe
- controls outside the unit
- thermostat JRT-100 TW or TB (wifi)
- no control system
- component power (inside the unit)
- thermostatic valve inside the unit (24V)
- no external signal

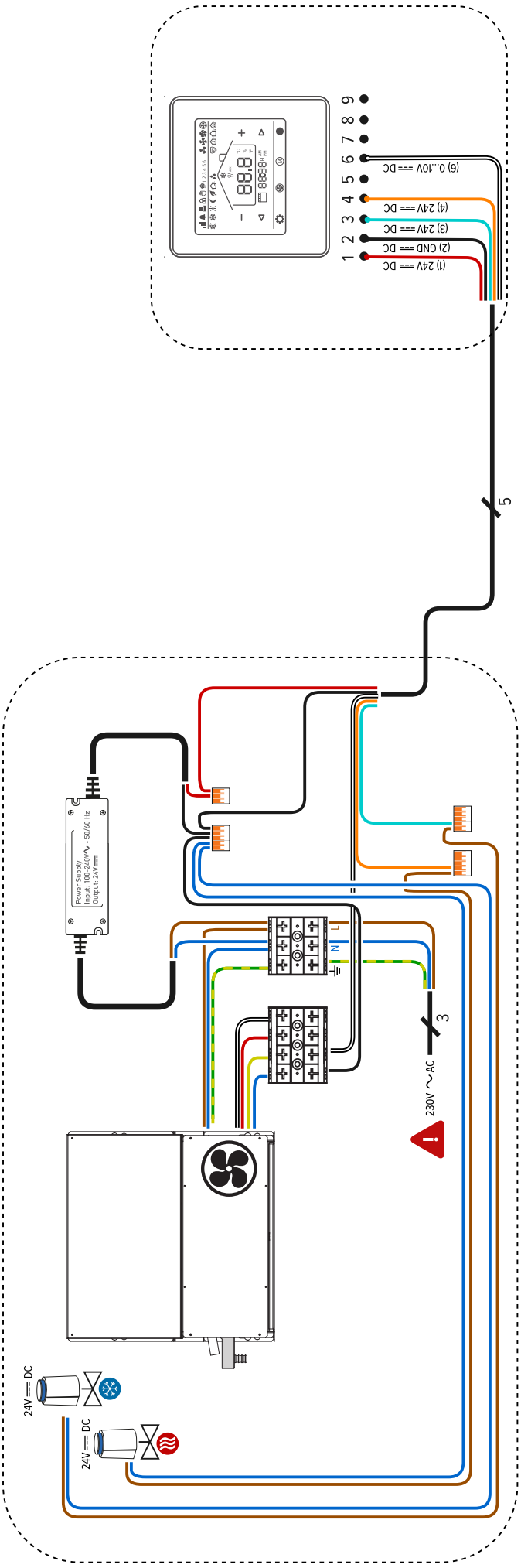

BRIZA 22 / 26 SAMPLE DIAGRAM 2

- 4-pipe
- controls outside the unit
- thermostat JRT-200 W
- no control system
- integrated power supply
- thermostatic valve inside the unit (24 V)
- external signal

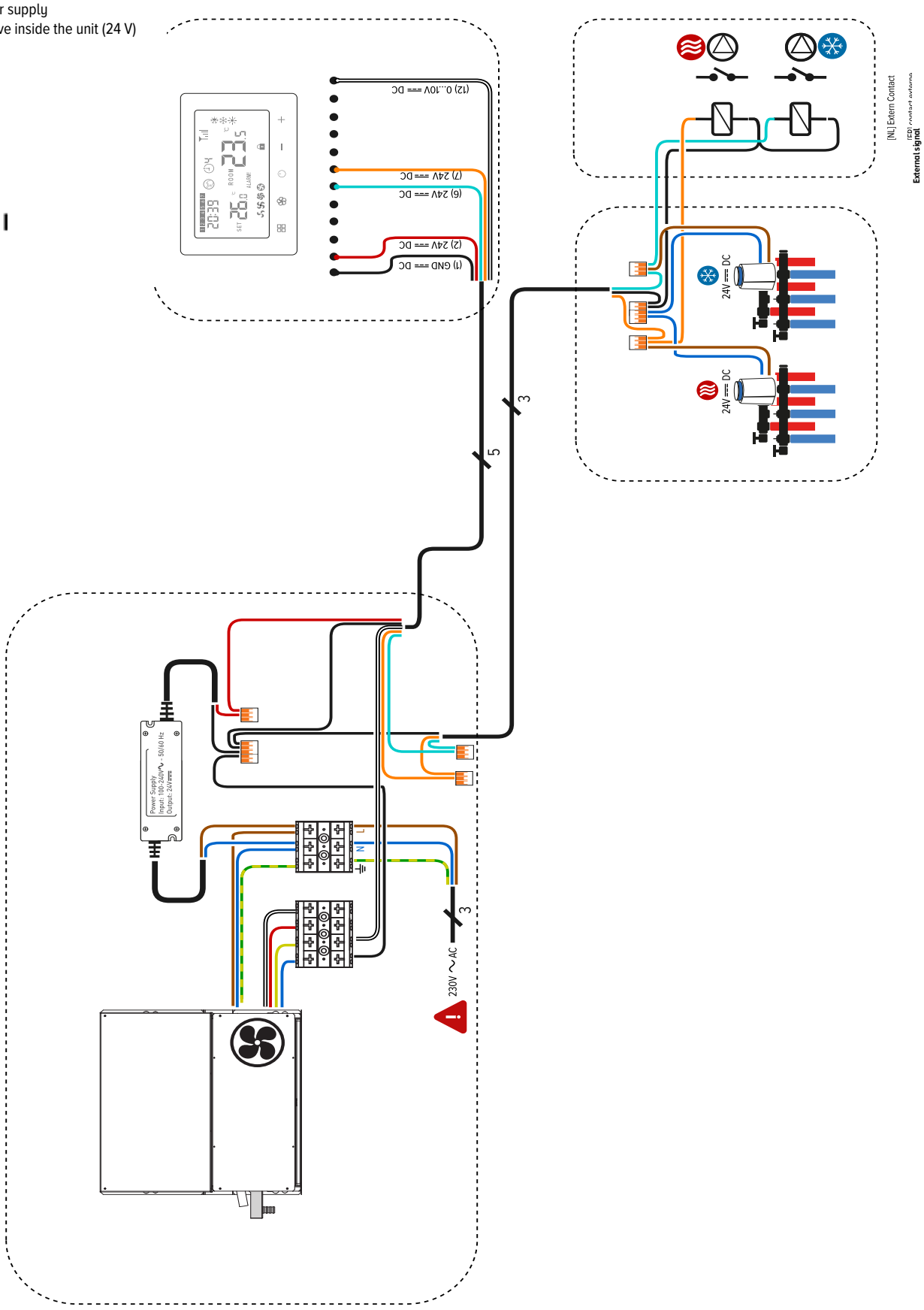

BRIZA 22 / 26 SAMPLE DIAGRAM 3

- 2-pipe
- controls outside the unit
- home automation / building management system
- control: Jaga BMS
- power supply DIN-rail assembly (outside the unit)
- thermostatic valve inside the unit (24 V) - 0 ... 10 V control
- no external signal

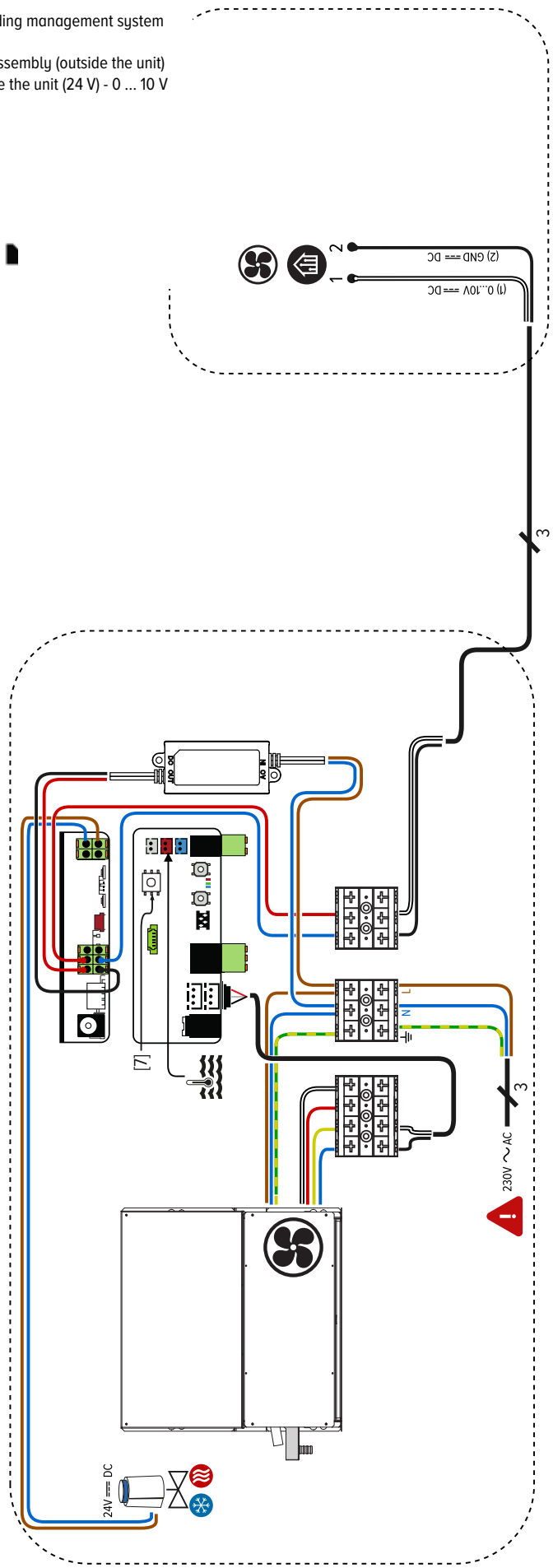

BRIZA 22 / 26 SAMPLE DIAGR

- 4-pipe
- controls outside the unit
- home automation / building management system
- no control system
- no power supply
- thermostatic valve inside the unit (24 V)
- no external signal

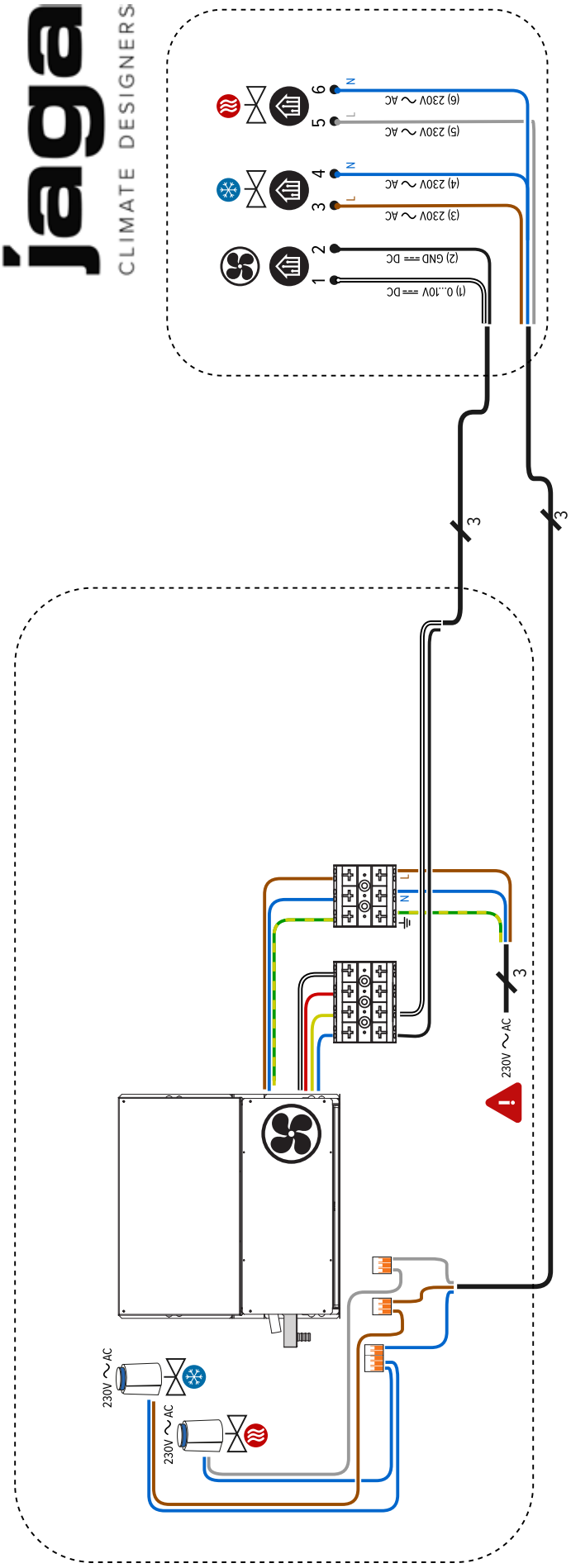

jaga CLIMATE DESIGNERS

JAGA UK

In need of advice? Make an appointment at the Jaga Advice Centre.

Kriekels House, Lower Road Trading Estate,

Herefordshire, HR8 2DJ,

United Kingdom

+44 1531 631 533

jaga@jaga.co.uk
jaga.com/uk

BELGIUM JAGA NV

Verbindingslaan 16
3590 Diepenbeek

+32 (0) 11 29 41 11

info@jaga.be
jaga.com

06 / 2026 - JAGA N.V.